The Synchronization Experts.

TECHNICAL REFERENCE

microSync

HR311/DC

Meinberg Funkuhren GmbH & Co. KG

Table of Contents

1 Imprint and Legal Information 1

2 Copyright and Liability Exclusion 2

3 Presentation Conventions in this Manual 3
- 3.1 Conventions for the Presentation of Critical Safety Warnings . . . 3
- 3.2 Secondary Symbols Used in Safety Warnings . . . 4
- 3.3 Conventions for the Presentation of Other Important Information . . . 4
- 3.4 Generally Applicable Symbols . . . 5

4 Important Safety Information 6
- 4.1 Appropriate Usage . . . 6
- 4.2 Product Documentation . . . 7
- 4.3 Safety During Installation . . . 8
- 4.4 Grounding the Device . . . 9
- 4.5 Electrical Safety . . . 10
  - 4.5.1 Special Information for Devices with DC Power Supply . . . 12
- 4.6 Safety when Handling SFP Modules . . . 12
- 4.7 Safety when Maintaining and Cleaning the Device . . . 13
- 4.8 Battery Safety . . . 13

5 Important Product Information 14
- 5.1 CE Marking . . . 14
- 5.2 UKCA Marking . . . 14
- 5.3 Ensuring the Optimum Operation of Your Device . . . 14
- 5.4 Maintenance and Modifications . . . 15
  - 5.4.1 Replacing the Battery . . . 15
- 5.5 Disposal . . . 16

6 microSync Introduction 17

7 microSync HR311/DC - Connectors 18
- 7.1 GPS Antenna . . . 19
- 7.2 Programmable Pulse Outputs . . . 20
- 7.3 Pulse Per Second Input . . . 21
- 7.4 10 MHz Input . . . 21
- 7.5 RS-232 COMx Time String . . . 22
- 7.6 Status Indicators: CPU & Receiver . . . 23
- 7.7 USB Interface . . . 24
- 7.8 Network Interfaces . . . 24
- 7.9 DMC X2 Terminal Connector . . . 26
- 7.10 Fiber-Optic Programmable Pulse Output . . . 27
- 7.11 DMC X1 Terminal Connector / DC Power Supply . . . 28

8 How Satellite Navigation Works 30
- 8.1 Time Zones and Daylight Saving Time . . . 30

9 Installing a GPS Antenna 31
- 9.1 Selecting the Antenna Location . . . 31
- 9.2 Installation of the Antenna . . . 33
- 9.3 Antenna Cable . . . 35

9.4 Surge Protection and Grounding . . . 38

10 Before You Start **44**
10.1 Initial Network Configuration . . . 44
10.1.1 Network Configuration via Serial Connection . . . 44
10.1.2 Network Configuration via Web Interface . . . 46
10.2 Initial Start of Operation . . . 48
10.2.1 Setup using the meinbergOS Web Interface . . . 48

11 Technical Appendix **49**
11.1 Technical Specifications: microSync Chassis . . . 49
11.2 Description of Timecode Formats . . . 51
11.3 Programmable Pulse Signals . . . 53
11.4 Supported Time Strings . . . 55
11.4.1 Meinberg Standard Time String . . . 55
11.4.2 Meinberg GPS Time String . . . 56
11.4.3 Meinberg Capture Time String . . . 57
11.4.4 SPA Time String . . . 58
11.4.5 SAT Time String . . . 59
11.4.6 Uni Erlangen Time String (NTP) . . . 60
11.4.7 NMEA 0183 String (RMC) . . . 62
11.4.8 NMEA 0183 Time String (GGA) . . . 63
11.4.9 NMEA 0183 Time String (ZDA) . . . 64
11.4.10 Computime Time String . . . 65
11.4.11 RACAL Time String . . . 66
11.4.12 SYSPLEX-1 Time String . . . 67
11.4.13 ION Time String . . . 68
11.4.14 ION Blanked Time String . . . 69
11.4.15 IRIG-J Timecode . . . 70
11.4.16 6021 Time String . . . 71
11.4.17 Freelance Time String . . . 73
11.5 Configuration - Options . . . 75
11.6 Protocols and Profiles . . . 75
11.7 Conformity . . . 75

12 Technical Appendix: GPS Antenna + Accessories **76**
12.1 Technical Specifications: GPSANTv2 Antenna . . . 76
12.2 Technical Specifications: MBG S-PRO Surge Protector . . . 79

13 RoHS Conformity **80**

14 Declaration of Conformity for Operation in the European Union **81**

15 Declaration of Conformity for Operation in the United Kingdom **82**

1 Imprint and Legal Information

Publisher

Meinberg Funkuhren GmbH & Co. KG

Registered Place of Business:
Lange Wand 9
31812 Bad Pyrmont
Germany

Telephone:
+49 (0) 52 81 – 93 09 - 0

Fax:
+49 (0) 52 81 – 93 09 - 230

The company is registered in the "A" Register of Companies & Traders (Handelsregister A) maintained by the Local Court of Hanover (Amtsgericht Hannover) under the number:

17HRA 100322

Executive Management: Heiko Gerstung
Andre Hartmann
Natalie Meinberg
Daniel Boldt

Website: https://www.meinbergglobal.com

Email: info@meinberg.de

Document Publication Information

Manual Version: 1.10

Revision Date: June 16, 2025

PDF Export Date: June 19, 2025

2 Copyright and Liability Exclusion

Except where otherwise stated, the contents of this document, including text and images of all types and translations thereof, are the intellectual property and copyright of Meinberg Funkuhren GmbH & Co. KG ("Meinberg" in the following) and are subject to German copyright law. All reproduction, dissemination, modification, or exploitation is prohibited unless express consent to this effect is provided in writing by Meinberg. The provisions of copyright law apply accordingly.

Any third-party content in this document has been included in accordance with the rights and with the consent of its copyright owners.

A non-exclusive license is granted to redistribute this document (for example, on a website offering free-of-charge access to an archive of product manuals), provided that the document is only distributed in its entirety, that it is not modified in any way, that no fee is demanded for access to it, and that this notice is left in its complete and unchanged form.

At the time of writing of this document, reasonable effort was made to carefully review links to third-party websites to ensure that they were compliant with the laws of the Federal Republic of Germany and relevant to the subject matter of the document. Meinberg accepts no liability for the content of websites not created or maintained by Meinberg, and does not warrant that the content of such external websites is suitable or correct for any given purpose.

While Meinberg makes every effort to ensure that this document is complete, suitable for purpose, and free of material errors or omissions, and periodically reviews its library of manuals to reflect developments and changing standards, Meinberg does not warrant that this specific document is up-to-date, comprehensive, or free of errors. Updated manuals are provided at https://www.meinbergglobal.com and https://www.meinberg.support.

You may also write to techsupport@meinberg.de to request an updated version at any time or provide feedback on errors or suggested improvements, which we are grateful to receive.

Meinberg reserves the right to make changes of any type to this document at any time as is necessary for the purpose of improving its products and services and ensuring compliance with applicable standards, laws & regulations.

3 Presentation Conventions in this Manual

3.1 Conventions for the Presentation of Critical Safety Warnings

Warnings are indicated with the following warning boxes, using the following signal words, colors, and symbols:

Caution!

This signal word indicates a hazard with a **low risk level**. Such a notice refers to a procedure or other action that may result in **minor injury** if not observed or if improperly performed.

Warning!

This signal word indicates a hazard with a **medium risk level**. Such a notice refers to a procedure or other action that may result in **serious injury** or even **death** if not observed or if improperly performed.

Danger!

This signal word indicates a hazard with a **high risk level**. Such a notice refers to a procedure or other action that will very likely result in **serious injury** or even **death** if not observed or if improperly performed.

3.2 Secondary Symbols Used in Safety Warnings

Some warning boxes may feature a secondary symbol that emphasizes the defining nature of a hazard or risk.

The presence of an “electrical hazard” symbol is indicative of a risk of electric shock or lightning strike.

The presence of a “fall hazard” symbol is indicative of a risk of falling when performing work at height.

This “laser hazard” symbol is indicative of a risk relating to laser radiation.

3.3 Conventions for the Presentation of Other Important Information

Beyond the above safety-related warning boxes, the following warning and information boxes are also used to indicate risks of product damage, data loss, and information security breaches, and also to provide general information for the sake of clarity, convenience, and optimum operation:

Important!

Warnings of risks of product damage, data loss, and also information security risks are indicated with this type of warning box.

Information:

Additional information that may be relevant for improving efficiency or avoiding confusion or misunderstandings is provided in this form.

3.4 Generally Applicable Symbols

The following symbols and pictograms are also used in a broader context in this manual and on the product.

The presence of the "ESD" symbol is indicative of a risk of product damage caused by electrostatic discharge.

Direct Current (DC) *(symbol definition IEC 60417-5031)*

Alternating Current (AC) *(symbol definition IEC 60417-5032)*

Grounding Terminal *(symbol definition IEC 60417-5017)*

Protective Earth Connection *(symbol definition IEC 60417-5019)*

Disconnect All Power Connectors *(symbol definition IEC 60417-6172)*

4 Important Safety Information

The safety information provided in this chapter as well as specific safety warnings provided at relevant points in this manual must be observed during every installation, set-up, and operation procedure of the device, as well as its removal from service.

Any safety information affixed to the product itself must also be observed.

Any failure to observe this safety information, these safety warnings, and other safety-critical operating instructions in the product documentation, or any other improper usage of the product may result in unpredictable behavior from the product, and may result in injury or death.

Depending on your specific device configuration and installed options, some safety information may not be applicable to your device.

Meinberg accepts no responsibility for injury or death arising from a failure to observe the safety information, warnings, and safety-critical instructions provided in the product documentation.

It is the responsibility of the operator to ensure that the product is safely and properly used.

Should you require additional assistance or advice on safety-related matters for your product, Meinberg's Technical Support team will be happy to assist you at any time. Simply send a mail to techsupport@meinberg.de.

4.1 Appropriate Usage

The device must only be used appropriately in accordance with the specifications of the product documentation! Appropriate usage is defined exclusively by this manual as well as any other relevant documentation provided directly by Meinberg.

Appropriate usage includes in particular compliance with specified limits! The device's operating parameters must never exceed or fall below these limits!

4.2 Product Documentation

The information in this manual is intended for readers with an appropriate degree of safety awareness.

The following are deemed to possess such an appropriate degree of safety awareness:

- **skilled personnel** with a familiarity with relevant national safety standards and regulations,
- **instructed personnel** having received suitable instruction from skilled personnel on relevant national safety standards and regulations.

Read the product manual carefully and completely before you set the product up for use.

If any of the safety information in the product documentation is unclear for you, do **not** continue with the set-up or operation of the device!

Safety standards and regulations change on a regular basis and Meinberg updates the corresponding safety information and warnings to reflect these changes. It is therefore recommended to regularly visit the Meinberg website at https://www.meinbergglobal.com or the Meinberg Customer Portal at https://meinberg.support to download up-to-date manuals.

Please keep all product documentation, including this manual, in a safe place in a digital or printed format to ensure that it is always easily accessible.

Meinberg's Technical Support team is also always available at techsupport@meinberg.de if you require additional assistance or advice on safety aspects of your Meinberg product.

4.3 Safety During Installation

This rack-mounted device has been designed and tested in accordance with the requirements of the standard IEC 62368-1 (*Audio/Video, Information and Communication Technology Equipment—Part 1: Safety Requirements*). Where the rack-mounted device is to be installed in a larger unit (such as an electrical enclosure), additional requirements in the IEC 62368-1 standard may apply that must be observed and complied with. General requirements regarding the safety of electrical equipment (such as IEC, VDE, DIN, ANSI) and applicable national standards must be observed in particular.

The device has been developed for use in industrial or commercial environments and may only be used in such environments. In environments at risk of high environmental conductivity ("high pollution degree" according to IEC 60664-1), additional measures such as installation of the device in an air-conditioned electrical enclosure may be necessary.

If the appliance has been brought into the usage area from a cold environment, condensation may develop; in this case, wait until the appliance has adjusted to the temperature and is completely dry before setting it up.

When unpacking & setting up the equipment, and before operating it, be sure to read the information on installing the hardware and the specifications of the device. These include in particular dimensions, electrical characteristics, and necessary environmental conditions.

Fire safety standards must be upheld with the device in its installed state—never block or obstruct ventilation openings and/or the intakes or openings of active cooling solutions.

The device with the highest mass should be installed at the lowest position in the rack in order to position the center of gravity of the rack as a whole as low as possible and minimize the risk of the rack tipping over. Further devices should be installed from the bottom, working your way up.

The device must be protected against mechanical & physical stresses such as vibration or shock.

Never drill holes into the device to mount it! If you are experiencing difficulties with rack installation, contact Meinberg's Technical Support team for assistance!

Inspect the device housing before installation. The device housing must be free of any damage when it is installed.

4.4 Grounding the Device

In order to ensure that the device can be operated safely and to meet the requirements of IEC 62368-1, the device must be correctly connected to the protective earth conductor via the protective earth terminal.

If an external grounding terminal is provided on the chassis, it must be connected to the grounding busbar for safety reasons before connecting the power supply. This ensures that any possible leakage current on the chassis is safely discharged to earth.

The screw, washer, and toothed lock washer necessary for mounting the grounding cable are provided on the grounding terminal of the chassis. A grounding cable is not included with the device.

Please ensure that your grounding cable has a thickness of 1.5 mm^2 or greater, that you use a suitable grounding terminal or lug, and that the cable is properly crimped!

4.5 Electrical Safety

This Meinberg product is operated at a hazardous voltage.

This system may only be set up and connected by skilled personnel, or by instructed personnel who have received appropriate technical & safety training from skilled personnel.

Custom cables may only be assembled by a qualified electrician.

Never work on cables carrying a live current!

Never use cables or connectors that are visibly damaged or known to be defective! Faulty, defective, or improperly connected shielding, connectors, or cables present a risk of injury or death due to electric shock and may also constitute a fire hazard!

Before operating the device, check that all cables are in good order. Ensure in particular that the cables are undamaged (for example, kinks), that they are not wound too tightly around corners, and that no objects are placed on the cables.

Cables must be laid in such a way that they do not present a tripping hazard.

The power supply should be connected using a short, low-inductance cable. Avoid the use of power strips or extension cables if possible. If the use of such a device is unavoidable, ensure that it is expressly rated for the rated currents of all connected devices.

Never connect or disconnect power, data, or signal cables during a thunderstorm! Doing so presents a risk of injury or death, as cables and connectors may conduct very high voltages in the event of a lightning strike!

Device cables must be connected or disconnected in the order specified in the user documentation for the device. Connect all cables only while the device is de-energized before you connect the power supply.

Always pull cable connectors out at **both** ends before performing work on connectors! Improperly connecting or disconnecting this Meinberg system may result in electric shock, possibly resulting in injury or death!

When pulling out a connector, **never** pull on the cable itself! Pulling on the cable may cause the plug to become detached from the connector or cause damage to the connector itself. This presents a risk of direct contact with energized components.

5-Pin MSTB Connector

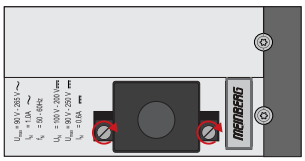

3-Pin MSTB Connector

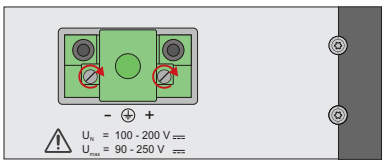

Illustration: Lock screws on an MSTB plug connector; in this case on a LANTIME M320

Ensure that all plug connections are secure. In particular, when using plug connectors with lock screws, ensure that the lock screws are securely tightened. This is especially important for power supply connectors where 3-pin or 5-pin MSTB connectors with lock screws are used (see illustration).

Before the device is connected to the power supply, the device housing must be grounded by connecting a grounding cable to the grounding terminal of the device.

When installing the device in an electrical enclosure, it must be ensured that adequate clearance is provided, minimum creepage distances to adjacent conductors are maintained, and that there is no risk of short circuits.

Protect the device from the ingress of objects or liquids!

If the device malfunctions or requires servicing (for example, due to damage to the housing, power supply cable, or the ingress of liquids or objects), the power supply may be cut off. In this case, the device must be isolated immediately and physically from all power supplies! The following procedure must be followed in order to correctly and reliably isolate the device:

- Pull the power supply plug from the power source.
- Loosen the locking screws of the MSTB power supply plug on the device and pull it out of the device.
- Contact the person responsible for your electrical infrastructure.
- If your device is connected to one or more uninterruptible power supplies (UPS), the direct power supply connection between the device and the UPS solution must be first be disconnected.

4.5.1 Special Information for Devices with DC Power Supply

In accordance with IEC 62368-1, it must be possible to disconnect the appliance from the supply voltage from a point other than the appliance itself (e.g., from the primary circuit breaker).

The power supply plug may only be fitted or dismantled while the appliance is isolated from the power supply (e.g., disconnected via the primary circuit breaker).

Power supply cables must have adequate fuse protection and have an adequate wire gauge size (1 mm^2 – 2.5 mm^2 / 17 AWG – 13 AWG).

The power supply of the device must have a suitable on-demand disconnection mechanism (i.e., a switch). This disconnection mechanism must be readily accessible in the vicinity of the appliance and marked accordingly as a disconnection mechanism for the appliance.

4.6 Safety when Handling SFP Modules

The fiber-optic SFP modules recommended by Meinberg are equipped with a Class 1 laser.

- Only use fiber-optic SFP modules that are compliant with the definition of a Class 1 laser in accordance with IEC standard 60825-1. Fiber-optic products that are not compliant with this standard may emit radiation capable of causing eye injuries.
- Never look into an unconnected connector of a fiber-optic cable or an unconnected SFP port.
- Unused fiber-optic connectors should always be fitted with a suitable protective cap.
- The safety information and manufacturer specifications relating to the SFP modules used must be heeded.
- The SFP module used must be capable of providing protection against voltage spikes in accordance with IEC 62368-1.
- The SFP module used must be tested and certified in accordance with applicable standards.

4.7 Safety when Maintaining and Cleaning the Device

Only use a soft, dry cloth to clean the device.

Never use liquids such as detergents or solvents to clean the device! The ingress of liquids into the device housing may cause short circuits in the electronic circuitry, which in turn can cause a fire or electric shock!

Neither the device nor its individual components may be opened. The device or its components may only be repaired by the manufacturer or by authorized personnel. Improperly performed repairs can put the user at significant risk!

In particular, **never** open a power supply unit or module, as hazardous voltages may be present within the power supply device even after it is isolated from the upstream voltage. If a power supply unit or module is no longer functional (for example due to a defect), it can be returned to Meinberg for repair.

Some components of the device may become very hot during operation. Do not touch these surfaces!

If maintenance work is to be performed on the device and the device housing is still hot, switch off the device beforehand and allow it to cool.

4.8 Battery Safety

The integrated CR2032 lithium battery has a service life of at least ten years.

Should it be necessary to replace the battery, please note the following:

- The battery may only be replaced by the same type or a comparable type recommended by the manufacturer.
- The battery may only be replaced by the manufacturer or authorized personnel.
- The battery must not be exposed to air pressure levels outside of the limits specified by the manufacturer.

Improper handling of the battery may result in the battery exploding or in leakages of flammable or corrosive liquids or gases.

- **Never** short-circuit the battery!
- **Never** attempt to recharge the battery!
- **Never** throw the battery in a fire or dispose of it in an oven!
- **Never** dispose of the battery in a mechanical shredder!

5 Important Product Information

5.1 CE Marking

This product bears the CE mark as is required to introduce the product into the EU Single Market.

The use of this mark is a declaration that the product is compliant with all requirements of the EU directives effective and applicable as at the time of manufacture of the product.

These directives are listed in the EU Declaration of Conformity, appended to this manual as → Chapter 14.

5.2 UKCA Marking

This product bears the British UKCA mark as is required to introduce the product into the United Kingdom (excluding Northern Ireland, where the CE marking remains valid).

The use of this mark is a declaration that the product is in conformity with all requirements of the UK statutory instruments applicable and effective as at the time of manufacture of the product.

These statutory instruments are listed in the UK Declaration of Conformity, appended to this manual as → Chapter 15.

5.3 Ensuring the Optimum Operation of Your Device

- Ensure that ventilation slots are not obscured or blocked by dust, or else heat may build up inside the device. While the system is designed to shut down safely and automatically in the event of temperature limits being exceeded, the risk of malfunctions and product damage following overheating cannot be entirely eliminated.
- The device is only deemed to be appropriately used and EMC limits (electromagnetic compatibility) are only deemed to be complied with while the device housing is fully assembled in order to ensure that requirements pertaining to cooling, fire safety, electrical shielding and (electro)magnetic shielding are upheld.

5.4 Maintenance and Modifications

Important!

Before performing any maintenance work on or authorized modification to your Meinberg system, we recommend making a backup of any stored configuration data (e.g., to a USB flash drive from the Web Interface).

5.4.1 Replacing the Battery

Your device's clock module is fitted with a lithium battery (type CR2032) that is used to locally storage almanac data and sustain operation of the real-time clock (RTC) in the reference clock.

This battery has a life of at least ten years. However, if the device exhibits the following unexpected behaviors, the voltage of the battery may have dropped below 3 V, and the battery will need to be replaced:

- The reference clock has the wrong date or wrong time when the system is started.
- The reference clock repeatedly starts in Cold Boot mode (i.e., upon starting, the system has no ephemeris data saved whatsoever, resulting in the synchronization process taking a very long time due to the need to rediscover all of the visible satellites).
- Some configuration options relating to the reference clock are lost every time the system is restarted.

In this case, you should not replace the battery on your own. Please contact the Meinberg Technical Support team, who will provide you with precise guidance on how to perform the replacement.

5.5 Disposal

Disposal of Packaging Materials

The packaging materials that we use are fully recyclable:

Material	Use for	Disposal
Polystyrene	Packaging frame/filling material	Recycling Depot
PE-LD (Low-density polyethylene)	Accessories packaging, bubble wrap	Recycling Depot
Cardboard	Shipping packaging, accessories packaging	Paper Recycling

For information on the proper disposal of packaging materials in your specific country, please inquire with your local waste disposal company or authority.

Disposal of the Device

This product falls under the labeling obligations of the Waste Electrical and Electronic Equipment Directive 2012/19/EU ("*WEEE Directive*") and thus bears this WEEE symbol. The presence of this symbol indicates that this electronic product may only be disposed of in accordance with the following provisions.

Important!

Do not dispose of the product or batteries via the household waste. Inquire with your local waste disposal company or authority on how to best dispose of the product or battery if necessary.

This product is considered to be a "**B2B**" product for the purposes of the WEEE Directive and is also classified as "**IT and Telecommunications Equipment**" in accordance with Annex I of the Directive.

It can be returned to Meinberg for disposal. Any transportation expenses for returning this product (at end-of-life) must be covered by the end user, while Meinberg will bear the costs for the waste disposal itself. If you wish for Meinberg to handle disposal for you, please get in touch with us. Otherwise, please use the return and collection systems provided within your country to ensure that your device is disposed of in a compliant fashion to protect the environment and conserve valuable resources.

Disposal of Batteries

Please consult your local waste disposal regulations for information on the correct disposal of batteries as hazardous waste.

6 microSync Introduction

microSync is a multipurpose synchronization solution with compact design and high performance. The microSync system provides multiple output signals and allows synchronization of both NTP clients and PTP slaves.

The device has four 100/1000 MBit network interfaces and can provide both, optical and electrical network connections by using SFP modules. It is possible to use different receiver variants, e.g. the 72-channel GNSS receiver for GPS, Galileo, GLONASS and BeiDou.

The sync optimized operating system supports NTP, PTP IEEE 1588 and a variety of protocols for management tasks.

Product Highlights

- Powerful IEEE 1588 PTP Time Server incl. IEC/IEEE 61850-9-3 & IEEE C.37.238
- High performance (S)NTP server
- Half rack solution for a space efficient design
- Different Oscillator options for advanced holdover performance
- meinbergOS Web Interface for configuration and status monitoring
- Three-year manufacturer's warranty
- Unlimited technical support including firmware updates

7 microSync HR311/DC - Connectors

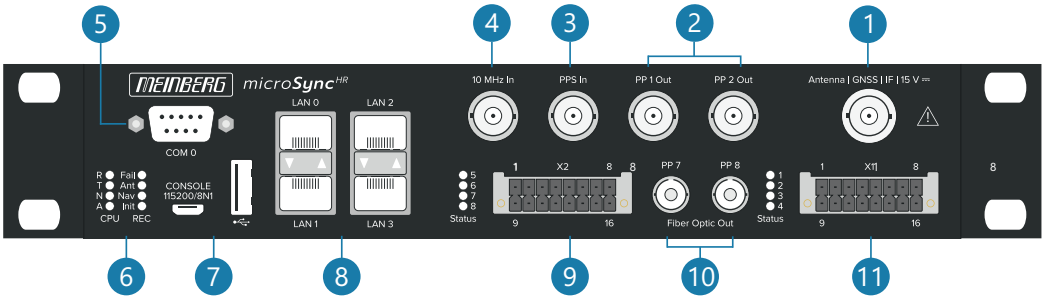

Information:

The numbering above relates to the corresponding subsection in this chapter.

7.1 GPS Antenna

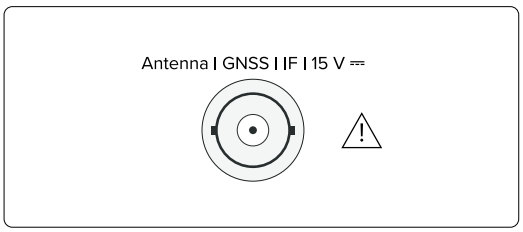

Receiver Type:	12-Channel GPS Receiver
Signal Support:	GPS: L1 C/A (1575.42 MHz)
Mixing Frequency: (Reference Clock to Antenna)	10 MHz [1]
Intermediate Frequency: (Antenna to Reference Clock)	35.4 MHz [1]
	1) These frequencies are transferred via the antenna cable
Power Supply Voltage of Antenna:	15 V (via antenna cable)
Power Consumption of Antenna:	100 mA (via antenna cable)
Connector Type:	BNC, Female
Cable Type:	Coaxial Cable, Shielded
Cable Length:	Max. 300 m (RG58) Max. 700 m (RG213) Max. 1100 m (H2010 Ultraflex)

Warning!

Do not work on the antenna system during thunderstorms!

Danger of death from electric shock!

- Do not carry out any work on the antenna system or the antenna cable if there is a risk of lightning strike.
- Do not carry out any work on the antenna system if it is not possible to maintain the prescribed safe distance to exposed lines and electrical substations.

7.2 Programmable Pulse Outputs

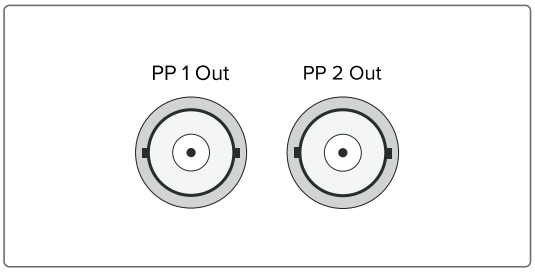

Output Signal: Programmable Pulses

Signal Level: TTL; 2.5 V with 50 Ω load

Connector Type: BNC, Female

Cable Type: Coaxial Cable, Shielded

Pulse Outputs:
Idle
Timer
Single Shot
Cyclic Pulse
Pulse per Second
Pulse per Minute
Pulse per Hour
DCF77 Marks
Position OK
Time Sync
All Sync
DCLS Timecode
Serial Time String
10 MHz Frequency
DCF77-like M59
Synthesizer Frequency
PTTI 1 PPS
1 MHz Frequency
5 MHz Frequency

(Refer to → Chapter 11.3, "Programmable Pulse Signals"
for more information on the programmable pulse outputs)

7.3 Pulse Per Second Input

Input signal	PPS (pulse per second)
Signal level:	TTL
Pulse lenght:	$\geq 5\ \mu s$, active high
Connection type:	BNC, female
Cable:	Coaxial cable, shielded

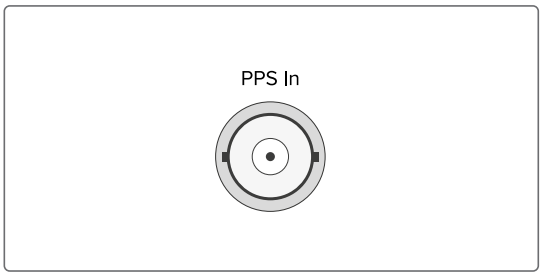

7.4 10 MHz Input

Input Signal:	10 MHz Frequency
Signal Level:	Sine Wave (1.5 V_{pp} – 5 V_{pp}) or TTL
Connector Type:	BNC, Female
Cable Type:	Coaxial Cable, Shielded

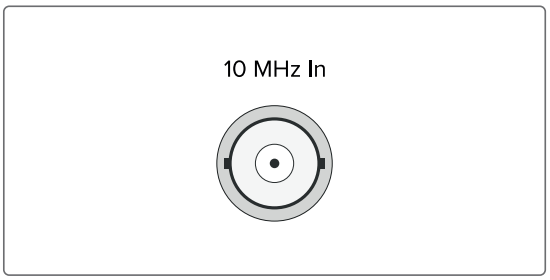

7.5 RS-232 COMx Time String

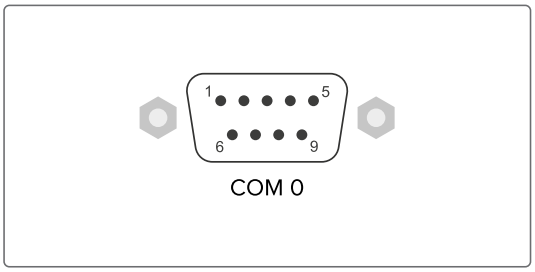

Data Transfer Mode: Serial

Baud Rate/Framing: 19200 / 8N1 (Default)

Time String: Meinberg Standard (default)
(Refer to → "Supported Time Strings" for more information about time strings)

Pin Assignment:
Pin 2: RxD (Receive)
Pin 3: TxD (Transmit)
Pin 5: GND (Ground)

Connector Type: D-Sub Male 9-Pin

Cable Type: Data Cable (Shielded)
PC Schnittstelle: 1:1

Synchronization with PPS + String:

Pin 1 - PPS In

Signal Level: TTL

Pulse Width: $\geq$5 μs (active high)

Pin 2 - String* In (RxD)

* The following time string formats are supported:
NMEA RMC
NMEA ZDA
Meinberg Standard
Uni Erlangen

7.6 Status Indicators: CPU & Receiver

CPU:

R (Receiver)

Green:	The reference clock (e.g., the integrated GPS) is providing a valid reference time.
Red:	The reference clock is not providing a valid reference time.

T (Time Service)

Green:	NTP is synchronized with the reference clock (e.g., the integrated GPS)
Red:	NTP is not synchronized or has switched to the "local clock".

N (Network)

Green:	All monitored network interfaces are connected and functional ("Link-Up").
Red:	There is a problem with at least one of the monitored network interfaces.

A (Alarm)

Off:	No error
Red:	General error

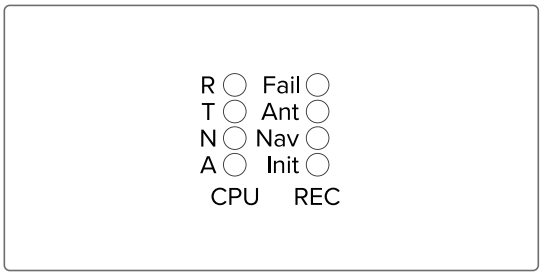

REC:

Fail

Red:	Not synchronized

Ant.

Red:	Not synchronized, no antenna connected, or short circuit on antenna line
Green:	Antenna connected and clock synchronized

Nav

Green:	Geopositioning completed

Init

Blue:	Initialization in progress
Green:	Oscillator is adjusted ('warmed up')

7.7 USB Interface

Signal	Signal Type	Connector Type
USB Terminal	USB-to Serial Terminal	Micro-USB Type-B
USB Host	USB Connector Management CPU	USB Type-A

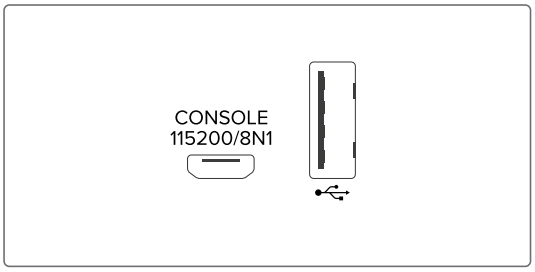

7.8 Network Interfaces

Gigabit Ethernet (GbE), 100/1000 MBit - SFP

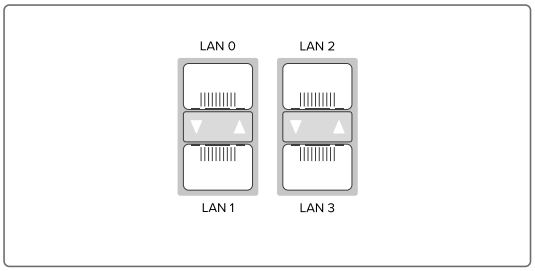

LAN 0, 1: Management / NTP
10/100/1000-BASE-T
(RJ45) or 1000FX (FO)

LAN 2, 3: Management / NTP / PTP
10/100/1000BASE-T
(RJ45) or 1000FX (FO)

Synchronous Ethernet:
Master and Slave Capable
Compliant with ITU-T G.8261, G.8262, and G.8264
Ethernet Synchronization Messaging Channel (ESMC)

Available SFP Modules

Recommended & tested third-party transceivers

Type	Mode	Connector Type	Max. Connection Length
FS SFP-GE-T	10/100/1000BASE-T SFP Copper	RJ45	100 m
BlueOptics	1000BASE-SX SFP, 850 nm multi mode	Duplex LC	100 m
BlueOptics BO05C13610D	1000 BASE-LX SFP, 1310 nm single mode	Duplex LC	10,000 m

Warning!

Prevention of Eye Injuries

- Fiber-optic SFP modules that are not compliant with the definition of a Class 1 laser in accordance with IEC standard 60825-1 may emit radiation capable of causing eye injuries.
- Never look into an unconnected connector or fiber-optic cable. Ensure that unused fiber-optic connectors are always fitted with a suitable protective cap.

7.9 DMC X2 Terminal Connector

Note: The male connector and the female connector of the X2 terminal have locking pins to prevent an incorrect connection with the DMC X1 terminal connector.

Pin 1	PP 5+	Programmable Pulse (Optocoupler)
Pin 2	PP 5	Programmable Pulse (RS-422A)
Pin 3	PP 5	Programmable Pulse (RS-422B)
Pin 4	PP 6	Programmable Pulse (RS-422A)
Pin 5	PP 6	Programmable Pulse (RS-422B)
Pin 6	+ TC In	DCLS Timecode (TTL, Insulated)
Pin 7	+ TCA* Out	DCLS Timecode (TTL, Insulated)
Pin 8	- TCA Out	DCLS Timecode (TTL, Insulated) *TTL Active High 250mA, Short-Circuit Proof*

* **TCA** = Timecode Amplified, DCLS Output with high output current.

Pin 9	PP 5-	Programmable Pulse (Optocoupler)
Pin 10	GND	Ground
Pin 11	GND	Ground
Pin 12	GND	Ground
Pin 13	GND	Ground
Pin 14	– TC In	DCLS Timecode (TTL, Insulated)
Pin 15		Not Connected
Pin 16		Not Connected

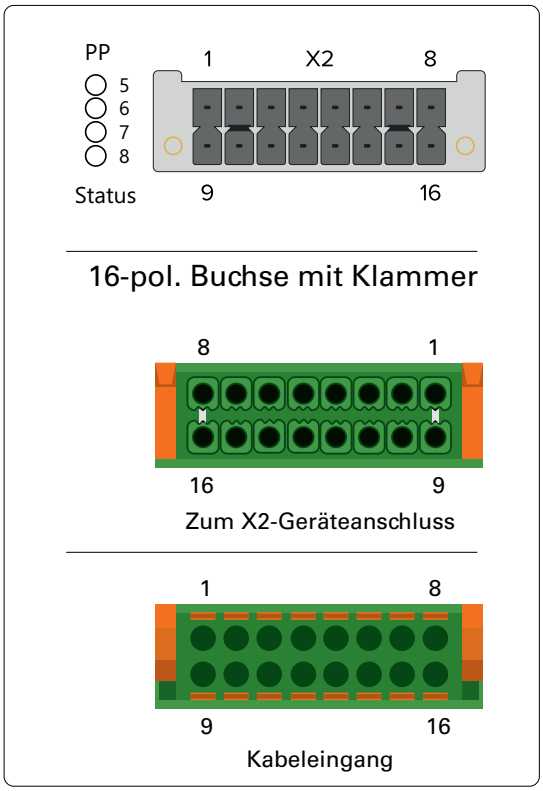

Status LEDs:

PP 5 – PP 8	Status of Pulse Outputs

Pin Assignment Diagram
Programmable Output PP 5
Galvanic isolated via optocoupler

U_{CEmax}	= 55 V
I_{Cmax}	= 50 mA
P_{tot}	= 150 mW

Response Time

Turn-On Time:	Typ. 5μs, max. 9μs
Turn-Off Time:	Typ. 10μs, max. 70μs

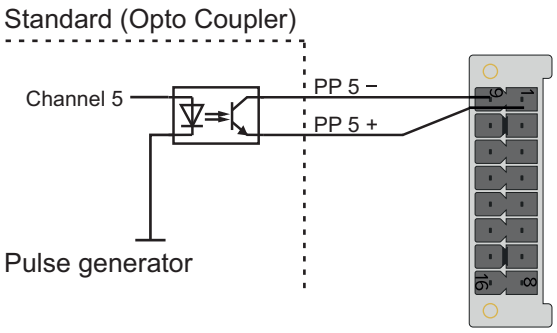

7.10 Fiber-Optic Programmable Pulse Output

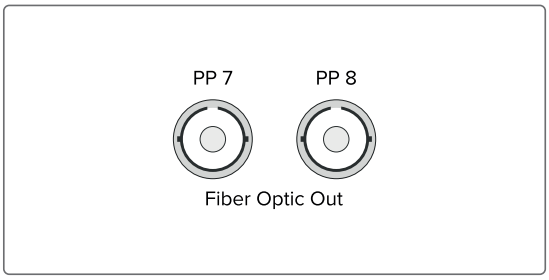

Output Signal: Programmable Signals (Fiber-Optic)

Output Type: Fiber-Optic (FO)

Wavelength: 850 nm (Multi-Mode)

Output Power: Typically 15 μw

Connector Type: ST Connector

Fiber Type: GI 50/125 μm or
GI 62.5/125 μm Graded-Index Fiber

Pulse Outputs:
Idle
Timer
Single Shot
Cyclic Pulse
Pulse per Second
Pulse per Minute
Pulse per Hour
DCF77 Marks
Position OK
Time Sync
All Sync
DCLS Time Code
Serial Time String
10 MHz Frequency
DCF77-like M59
Synthesizer Frequency
PTTI 1 PPS
1 MHz Frequency
5 MHz Frequency

(Refer to → Chapter 11.3, "Programmable Pulse Signals"
for more information on the programmable pulse outputs)

Caution!

This fiber-optic interface contains a light-emitting diode (LED).

Unused fiber-optic connectors should always be fitted with a suitable protective cap.

7.11 DMC X1 Terminal Connector / DC Power Supply

Note: The connector on the device side and the connection socket of the X1 terminal are provided with coding pins to avoid confusion with the X2 connection terminal.

Connection Type: DMC Connector

Power Supply: Pin 1: -DC In
Pin 9: +DC In

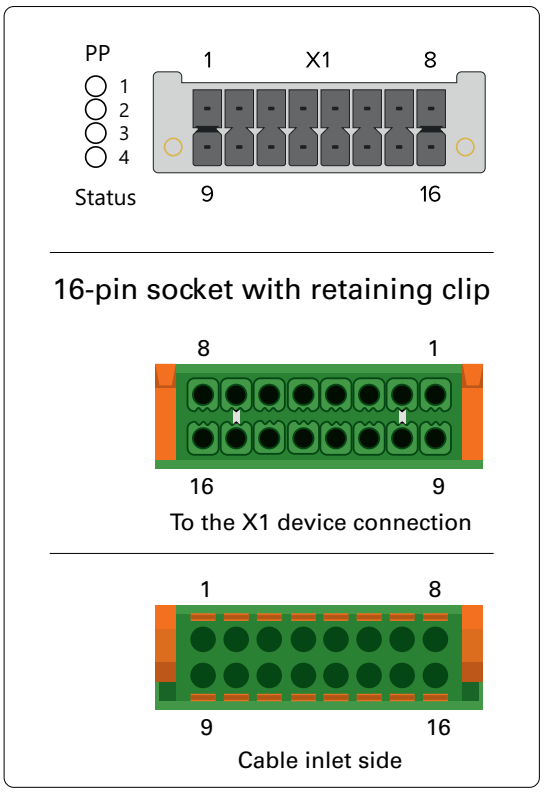

Input Parameter

Nominal Voltage:	U_N	=	48 V ⎓
Max. Voltage Range:	U_{max}	=	20-60 V ⎓
Nominal Current:	I_N	=	0.63 A

Output Parameter

Max. Power:	P_{max}	=	30 W
Max. thermal energy:	E_{therm}	=	108,00 kJ/h (102,37 BTU/h)

Pin 1	-DC In	negative potential of operating voltage
Pin 2		not used
Pin 3	PP 1-	programmable pulse
Pin 4	PP 2-	programmable pulse
Pin 5	PP 3-	programmable pulse
Pin 6	PP 4-	programmable pulse
Pin 7	REL-NO	Error/Relay (normally open)
Pin 8	REL-CO	Error/Relay (common)
Pin 9	+DC in	positive potential of the operating voltage
Pin 10		not used
Pin 11	PP 1+	programmable pulse
Pin 12	PP 2+	programmable pulse
Pin 13	PP 3+	programmable pulse
Pin 14	PP 4+	programmable pulse
Pin 15	not used	
Pin 16	REL-NC	Error-Relay (normally closed)

Status-LEDs:
PP 1 ... PP 4 — Status of the programmable Pulses Out

Scheme Terminal assignment
Programmable Pulses

Four programmable outputs (PP 1 - PP 4)
DC-insulated by optocouplers

U_{CEmax} = 55 V
I_{Cmax} = 50 mA
P_{tot} = 150 mW

Response time
Turn on Time: typ. 5μs, max. 9μs
Turn off Time: typ. 10μs, max. 70μs

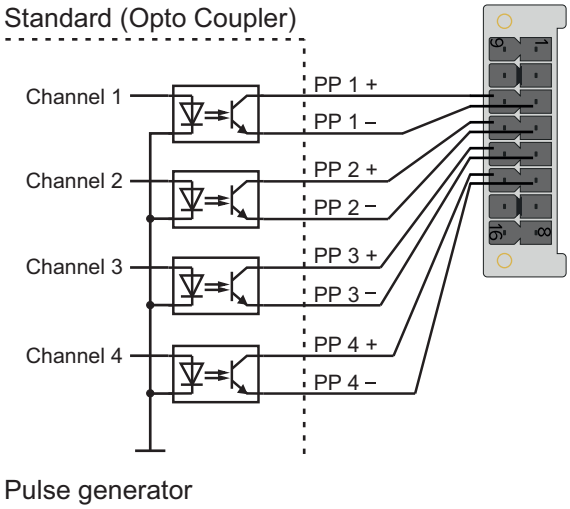

Error Relay
The X1 connector has a potential-free contact which is controlled directly by the used reference clock (GPS, GNS, GNS-UC). Normally, when the reference clock has synchronized, the the relay contact "NO" switch to active. If the reception is disturbed or the device is switched off, the relay contact "NC" is active.

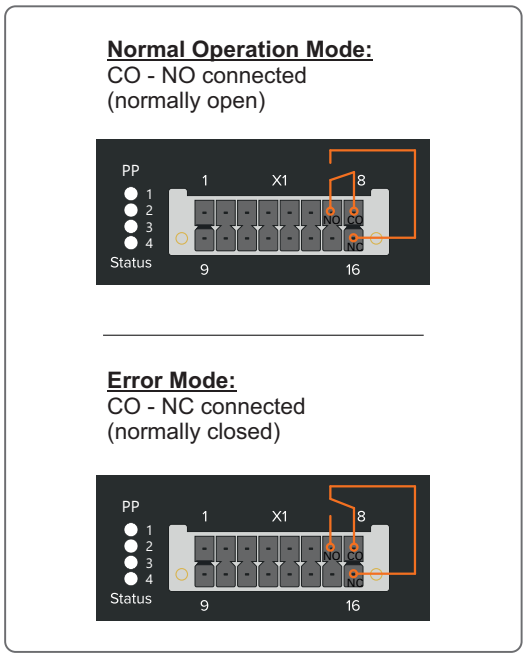

Technical Specification

Switching Voltage max:	60 V DC
Switching Current max:	I_{max}: 400mA
Switching Load max:	24 W
Response Time:	ca.2ms

8 How Satellite Navigation Works

The use of a receiver for location tracking and time synchronization relies on the ability to measure the satellite-to-receiver propagation delay as precisely as possible. It is necessary to have simultaneous reception from at least four satellites so that the receiver can determine its relative spatial position in three dimensions (x, y, z) and measure the deviation of its clock against the system clock. Monitoring stations around the planet track the orbital trajectory of the satellites and detect deviations between the local atomic clocks and the system time. The collected data is transmitted up to the satellites, which then send navigation data back to Earth.

The high-precision trajectory data of each satellite, known as the satellite's ephemeris, is needed by the receiver to continuously calculate the precise location of the satellites in space. A roughly defined ephemeridal schedule based on empirical data, referred to as an almanac, is used by a receiver to identify which satellites are visible above the horizon given a known approximate location and time. Each satellite transmits its own ephemeridal schedule as well as the almanacs of all existing satellites.

Satellite Systems

GPS was installed by the United States Department of Defense (US DoD) and operates at two performance levels: the Standard Positioning Service, or SPS, and the Precise Positioning Service, or PPS. The structure of the messages transmitted by the SPS has been openly published and reception is provided for public use. The timing and navigation data of the more precise PPS is encrypted and is thus only accessible to certain (usually military) users.

GLONASS was originally developed by the Russian military for real-time navigation and ballistic missile guidance systems. GLONASS satellites also send two types of signal: a Standard Precision Signal (SP) and an encrypted High Precision Signal (HP).

BeiDou is a Chinese satellite navigation system. The second-generation system, officially referred to as the BeiDou Navigation Satellite System (BDS) and also known as "COMPASS", consists of 35 satellites. BeiDou entered service in December 2011 with ten satellites and was made available to users in the Asia-Pacific region. The system was completed in June 2020 with the launch of the final satellite.

Galileo is an in-development global European satellite navigation and time reference system controlled by a civilian authority (European Union Agency for the Space Programme, EUSPA). Its purpose is the worldwide delivery of high-precision navigation data and is similarly structured to the American GPS, Russian GLONASS and Chinese BeiDou systems. The main differences in the systems lie in their approaches to frequency usage & modulation and the satellite constellation.

8.1 Time Zones and Daylight Saving Time

GPS System Time is a linear timescale that was synchronized with the international UTC timescale (Coordinated Universal Time) when the satellite system became operational in 1980. Since it has entered service, however, several leap seconds have been introduced to the UTC timescale to adjust UTC time to irregularities in the Earth's rotation. While GPS System Time deviates from UTC time by several seconds for this very reason, satellite messages do incorporate the number of seconds by which these timescales deviate from one another, allowing GPS receivers to be synchronized internally with the international UTC timescale.

The receiver's microprocessor can identify any time zone based on UTC time and automatically apply Daylight Saving Time adjustments over several years if so configured by the user.

9 Installing a GPS Antenna

The following chapters explain how to select a suitable location for your antenna, how to fit the antenna, and how to implement effective anti-surge protection for your antenna installation.

9.1 Selecting the Antenna Location

There are essentially two ways a compatible Meinberg GPS Antenna (such as a GPSANTv2) can be installed using the accessories included:

1. Mounted on a pole

2. Mounted on a wall

To avoid difficulties with synchronization of your connected Meinberg time server, select a location that allows for an unobstructed view of the sky (Fig. 1) so as to ensure that enough satellites can be found.

To ensure that your antenna has the best 360° view possible, Meinberg recommends mounting the antenna on a roof on a suitable metal pole (see Fig. 1, antenna on right). If this is not possible, the antenna may be mounted on the wall of a building, but must be high enough above the edge of the roof (see Fig. 1, antenna on left).

This prevents the line of sight between the antenna and the satellites from being partially or fully obstructed and limits the impact of GNSS signal reflections from other surfaces such as house walls.

1. Mounted on a pole
2. Antenna cable
3. Mounted on a wall
4. Point of entry into building

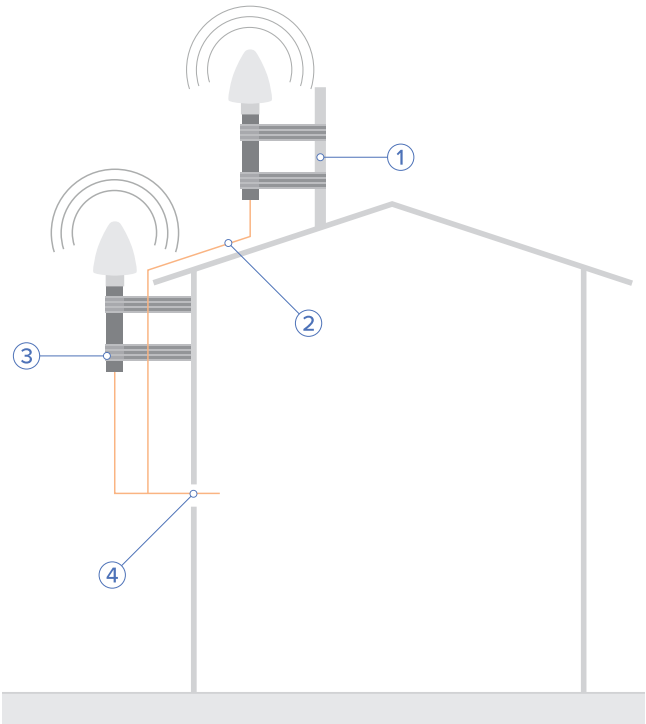

Fig. 1: Ideal Positioning

If there is a solid obstacle (a building or part of a building) in the line of sight between the antenna and each of the satellites (see Fig. 2), it is likely that the satellite signals will be partially or fully obstructed or that reflected signals will cause interference, causing problems with signal reception.

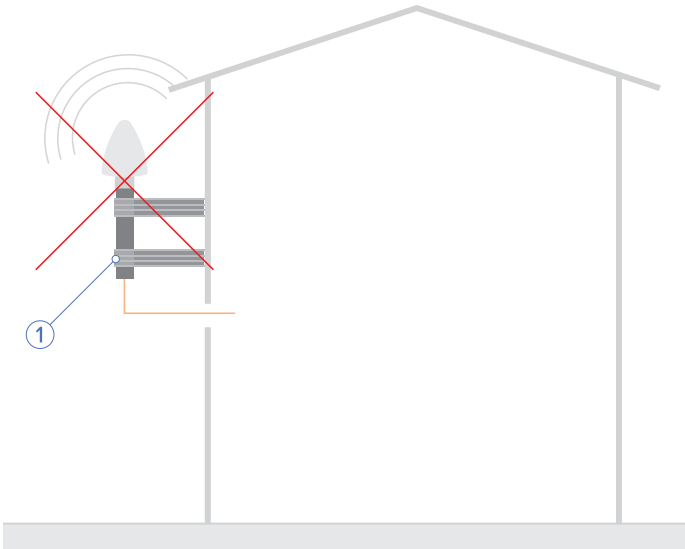

Fig. 2: Poor positioning of a wall-mounted antenna (1)

There must also be no conductive objects, overhead power lines, or other electrical lighting or power circuits within the signal cone of the antenna (approx. 98 degrees), as these can cause interference in the already weak signals transmitted in the frequency band of the satellites.

Other Installation Criteria for Optimum Operation:

- Vertical installation of antenna (see Fig. 1)
- At least 50 cm (1.5 ft) distance to other antennas
- A clear view towards the equator
- A clear view between the 55th north and 55th south parallels (satellite orbits).

Information:

Problems may arise with the synchronization of your Meinberg product if these conditions are not met, as four satellites must be located to calculate the exact position.

9.2 Installation of the Antenna

Please read the following safety information carefully before installing the antenna and ensure that it is observed during the installation.

Danger!

Do not mount the antenna without an effective fall arrester!

Danger of death from falling!

- Ensure that you work safely when installing antennas!
- **Never** work at height without a suitable and effective fall arrester!

Danger!

Do not work on the antenna installation during thunderstorms!

Danger of death from electric shock!

- **Do not** carry out any work on the antenna installation or the antenna cable if there is a risk of lightning strike.
- **Do not** perform any work on the antenna installation if it is not possible to maintain the prescribed safety distance from exposed power lines or electrical substations.

Mount the Meinberg GPS Antenna (as shown in Fig. 3) at a distance of at least 50 cm (1.6 ft) to other antennas using the mounting kit provided, either onto a vertical pole of no more than 60 mm (2.36 in) diameter or directly onto a wall.

Item	Description	QTY
1	Antenna	1
2	M8 grounding stud	1
3	safety washer	1
4	M8 hex nut	1
5	Antenna pole	1
6	M4 hex nut	8
7	M4 x 12 phillips-head screw	8
8	threaded U-bolt (pole diameter max. 60 mm)	2
9	M6 spacer	4
10	M6 hex nut	4
11	pole clamp halves	4
12	pole bracket	2

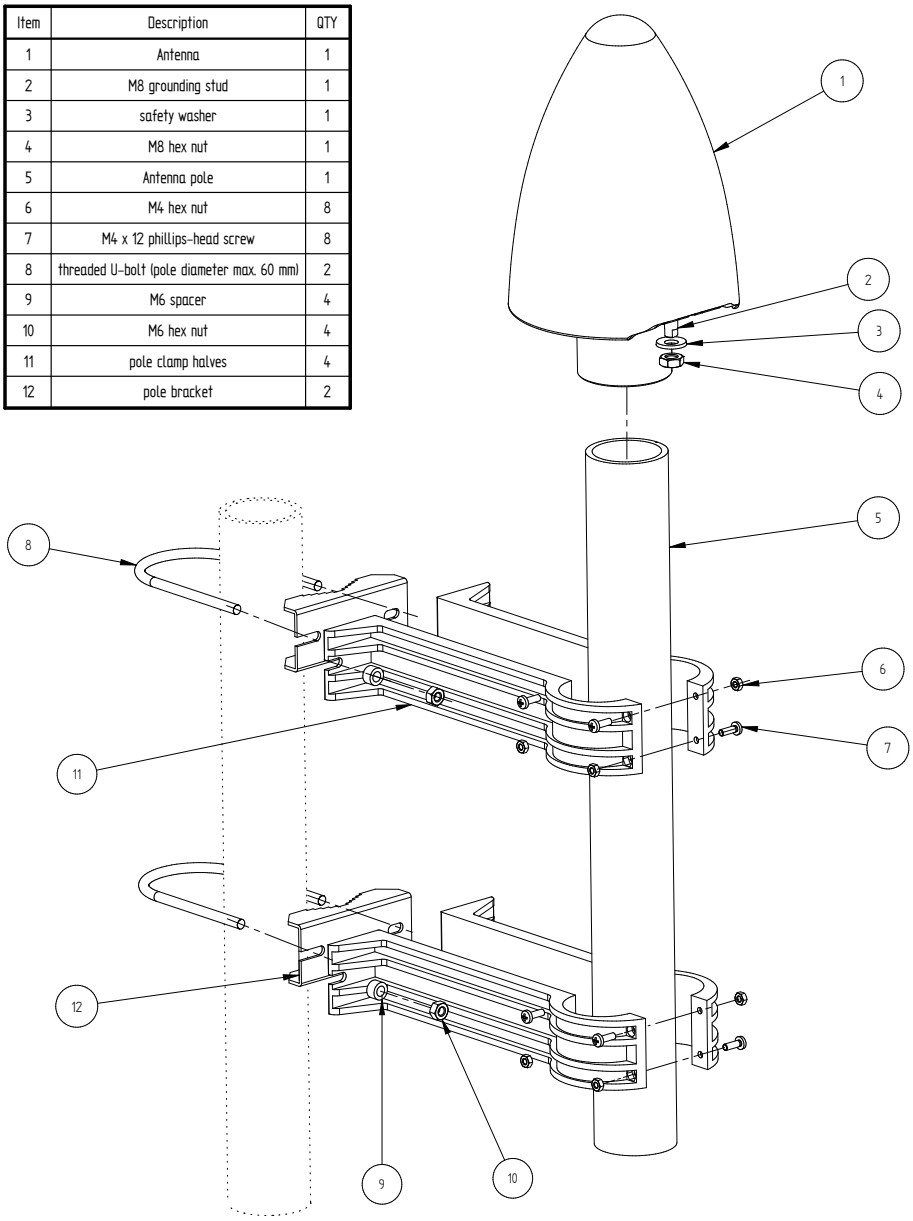

Fig. 3: Mounting a Meinberg GPS Antenna onto a Pole

Fig. 3 illustrates the mounting of a Meinberg GPS Antenna on a pole by way of example. When mounting the antenna on a wall, the four wall plugs and M6x45 screws should be used to mount the two halves of the pole clamp (Fig. 3, Pos. 12) using the provided screw slits.

→ **Chapter 9.3, "Antenna Cable"** explains how the antenna cable should be laid.

9.3 Antenna Cable

Selecting the Appropriate Cable

Meinberg provides suitable cable types with its antennas and these are ordered together with the antenna to match the length you need from your antenna to your Meinberg reference clock. The route to be covered for your antenna installation should be determined and the appropriate cable type selected accordingly before confirming your order.

Important!

Please avoid using a mixture of different cable types for your antenna installation. This should be taken into consideration in particular when purchasing additional cable, for example to extend an existing cable installation.

The cable is shipped with both ends fitted with the appropriate connectors as standard, although the cable can also be shipped without any pre-fitted connectors if so requested.

The table below shows the specifications of the supported cable types for the transmission of the 35 MHz intermediate frequency:

Cable Type	RG58C/U	RG213	H2010 (Ultraflex)
Signal Propagation Time at 35 MHz*	503 ns/100 m	509 ns/100 m	387 ns/100 m
Attenuation at 35 MHz	8.48 dB/100 m	3.46 dB/100 m	2.29 dB/100 m
DC Resistance	5.3 Ω/100 m	1.0 Ω/100 m	1.24 Ω/100 m
Cable Diameter	5 mm	10.3 mm	10.2 mm
Max. Cable Length	300 m	700 m	1100 m

Table: Specifications of Cable Types Recommended by Meinberg

** The propagation times are specified on the basis of 100 m cable; these values can be used as a reference to calculate the propagation time of any other arbitrary length of cable.*

Laying the Antenna Cable

When laying the antenna cable, ensure that the specified maximum cable length is not exceeded. This length will depend on the selected cable type and its attenuation factor. If the specified maximum length is exceeded, correct transmission of the synchronization data and thus proper synchronization of the reference clock can no longer be guaranteed.

Lay the coaxial cable from the antenna to the point of entry into the building as shown in Figures 5 and 6 in → Chapter 9.4, "Surge Protection and Grounding". Like any other metallic object in the antenna installation (antenna and pole), the antenna cable must be integrated into the grounding infrastructure of the building and also connected to the other metallic objects.

Caution!

When laying the antenna cable, ensure that sufficient distance is maintained from live cables (such as high-voltage power lines), as these can cause severe interference and compromise the quality of the antenna signal significantly. Surges in power lines (caused, for example, by lightning strike) can generate induced voltages in a nearby antenna cable and damage your system.

Further Points to Consider when Laying Antenna Cable

- The minimum bend radius of the cable must be observed[1].
- Any kinking, crushing, or other damage to the external insulation must be avoided.
- Any damage or contamination of the coaxial connectors must be avoided.

[1] *The bend radius is the radius at which a cable can be bent without sustaining damage (including kinks).*

Compensating for Signal Propagation Time

The propagation of the signal from the antenna to the receiver (reference clock) can incur a certain delay. This delay can be compensated for in the meinbergOS Web Interface by entering a fixed offset in nanoseconds under "**Bias**".

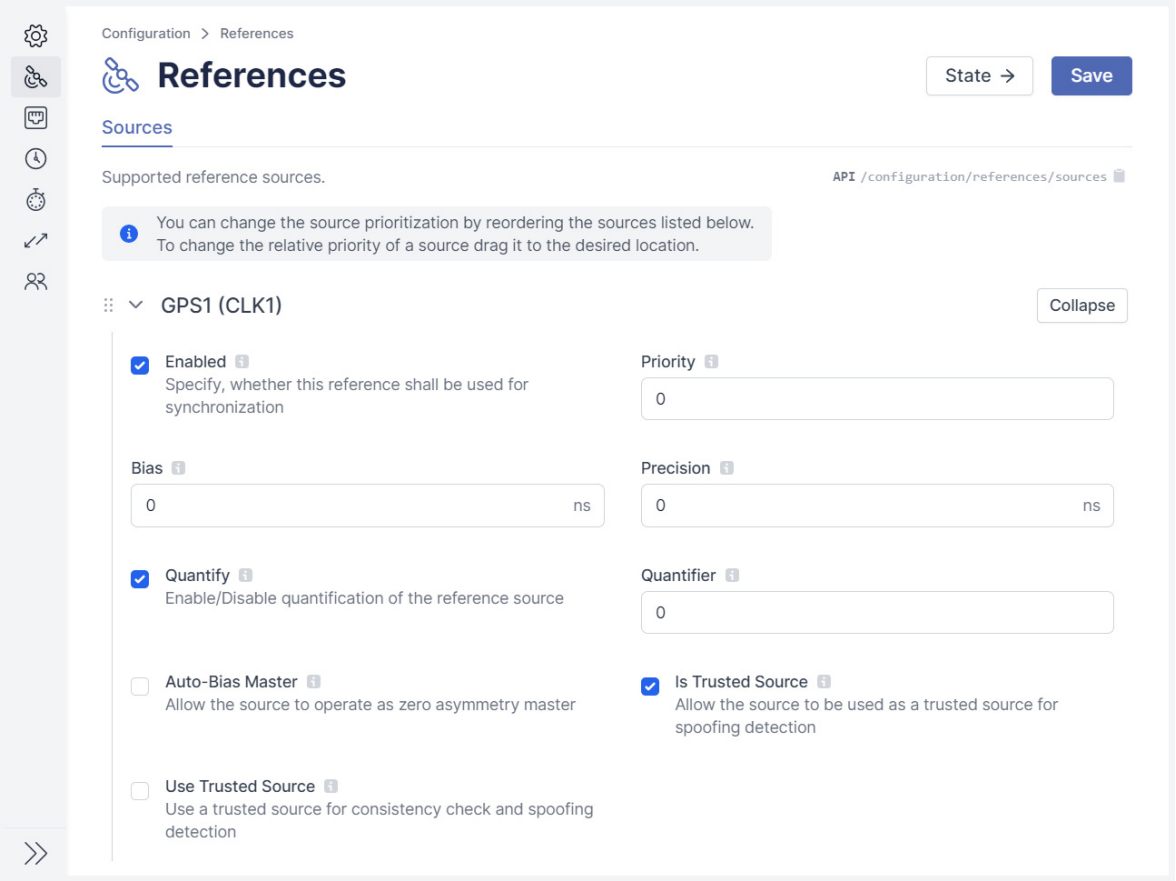

*Fig. 4.2: "**References**" menu in meinbergOS Web Interface*

→ Chapter 9.4, "Surge Protection and Grounding" explains how to implement effective surge protection for an antenna installation.

9.4 Surge Protection and Grounding

The greatest risk to an antenna installation and the electronic devices connected to it is exposure to lightning strikes. An indirect lightning strike in the vicinity of the antenna or coaxial cable can induce significant surge voltages in the coaxial cable.

Without inline protection, such induced surge voltages can be passed to the antenna and to other indoor devices patched into the coaxial line (specifically, your Meinberg System), potentially causing significant damage to or even destroying not only your antenna but also any connected receivers and signal distributors. Such surge voltage scenarios also present a risk of fire and injury.

This is why antennas and antenna cables must always be integrated into a building's equipotential bonding infrastructure (Point 4, Figure 5) as part of an effective lightning protection strategy to ensure that voltages induced by lightning strikes directly on or indirectly near the antenna are redirected safely to ground.

Warning!

Surge protection and lightning protection systems may only be installed by persons with suitable electrical installation expertise.

Meinberg GPSANTv2

Meinberg's new-generation "GPSANTv2" antenna features integrated surge protection in accordance with IEC 61000-4-5 Level 4 to reliably shield the antenna against surge voltages. The antenna also has a grounding terminal to allow it to be connected as directly as possible to a bonding conductor using a grounding cable. Please refer to the standards regarding antenna installations (e.g., DIN EN 60728-11) for more information.

However, in order to preserve the safety of the building and to protect your Meinberg system, Meinberg recommends the use of the MBG S-PRO surge protector, which is addressed in more detail later in this chapter.

Surge Protection

VDE 0185-305 (IEC 62305) (relating to buildings with lightning protection systems) and VDE 0855-1 (IEC 60728-11) (addressing bonding strategies and the grounding of antenna installations in buildings with no external lightning protection system) are the lightning protection standards applicable to antenna installations on a building. Antennas must generally be integrated into a building's lightning protection system or bonding infrastructure.

If the antenna represents the highest point of a building or pole, the lightning protection strategy should incorporate a safety zone (angle α, Fig. 5 and 6), formed by a lightning rod positioned above the antenna. This increases the likelihood of lightning being 'caught' by the lightning rod, allowing surge currents to be safely passed from the lightning rod along a grounding conductor to ground.

Electrical Bonding

Electrical bonding is the connection of all metallic, electrically conductive elements of the antenna installation in order to limit the risk of dangerous voltages for people and connected devices.

To this end, the following elements should be connected and integrated into a bonding system:

- the antenna cable shielding using cable shield bonding connectors*
- the core conductor of the antenna cable using surge protection devices
- antennas, antenna poles
- ground electrodes (e.g., foundation electrode)

* Minimum IP rating IP X4 when using bonding connectors outdoors.

Connecting the Grounding Terminal of the Antenna

As mentioned previously, the antenna must be connected to a grounding busbar using a grounding cable (not included). A grounding cable must be assembled for this purpose; the recommended conductor thickness is 4 mm^2 – 6 mm^2 and a ring terminal fitting the M8 (0.315 inch) grounding bolt must be used.

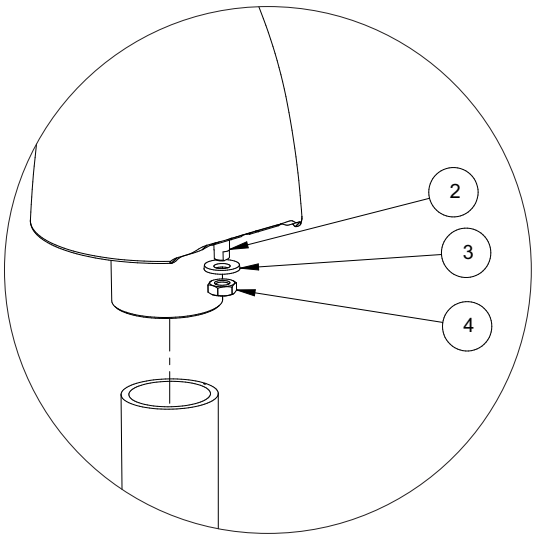

Grounding Cable Installation Procedure:

1. Remove the nut (Pos. 4) and the safety washer (Pos. 3).
2. Place the ring terminal onto the grounding bolt (Pos. 2).
3. First place the safety washer (Pos. 3) onto the grounding bolt (Pos. 2), then screw the M8 nut (Pos. 4) onto the thread of the grounding bolt.
4. Tighten the nut (Pos. 4) with a max. torque of 6 Nm.

Once the antenna has been correctly installed with the grounding cable, connect the grounding cable to the bonding bar (see Fig. 5 and 6).

The following drawings illustrate how a Meinberg GPS Antenna can be installed in accordance with the above conditions on a pole (e.g., antenna pole) or building roof.

Antenna Installation without Insulated Lightning Rod System

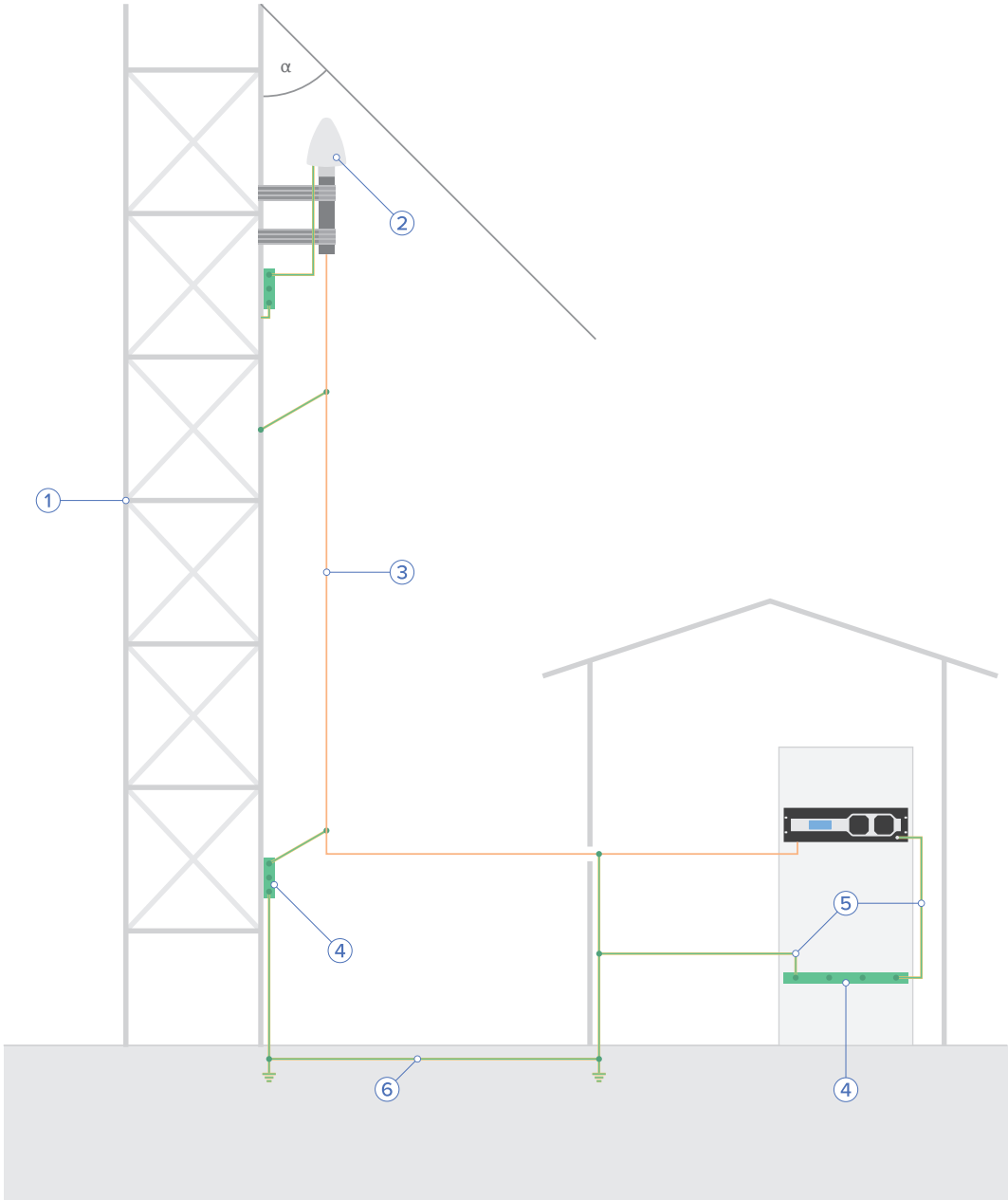

Fig. 5: Installation on a Pole

1 Antenna Pole
2 Meinberg GPS Antenna
3 Antenna Cable
4 Bonding Bar
5 Bonding Conductor
6 Foundation Electrode
α Safety Zone

Antenna Installation with Insulated Lightning Rod System

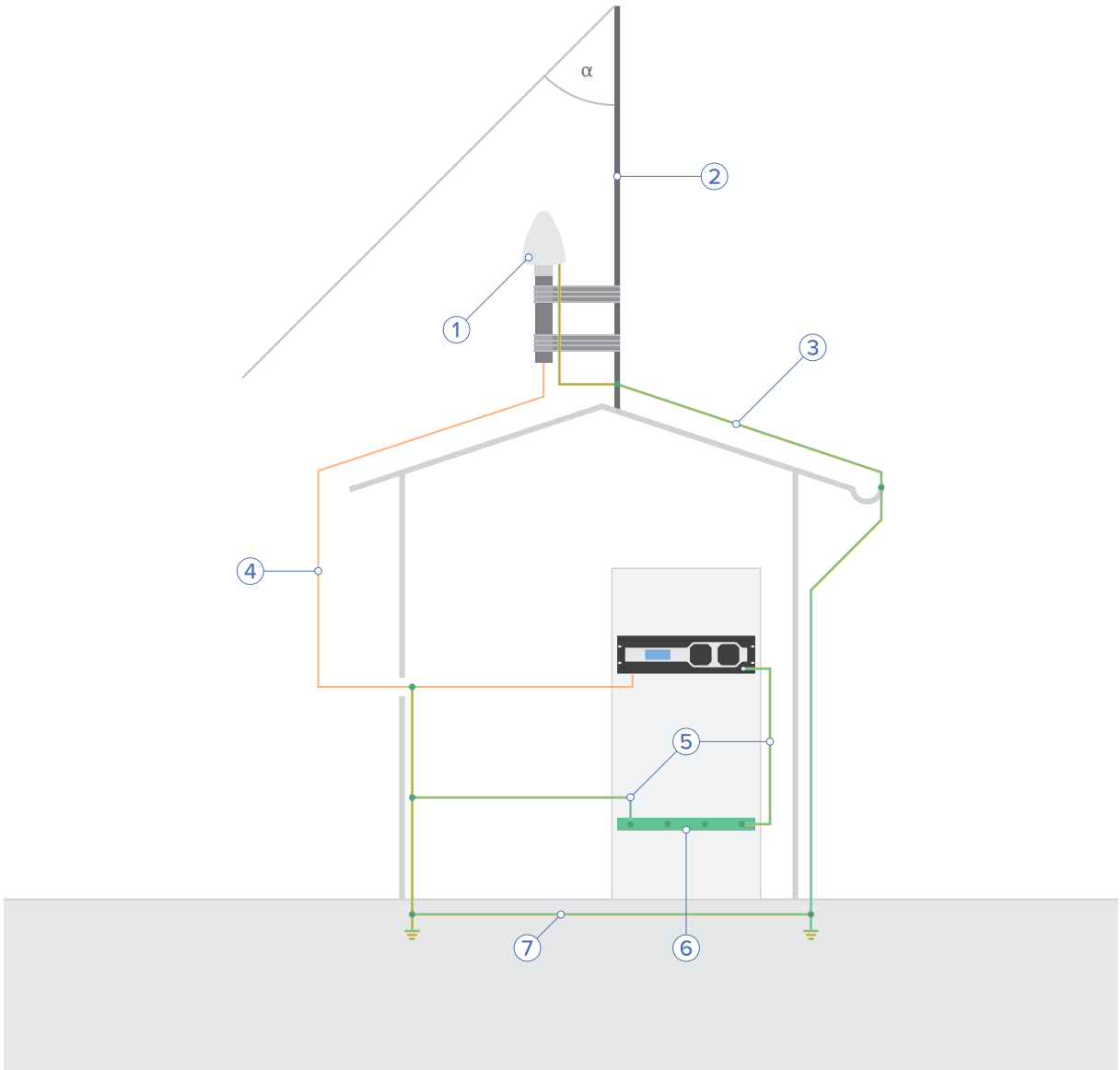

Fig. 6: Roof Installation

1 Meinberg GPS Antenna
2 Lightning Rod
3 Lightning Rod Conductor
4 Antenna Cable
5 Bonding Conductor
6 Bonding Bar
7 Foundation Electrode
α Safety Zone

Optional MBG S-PRO Surge Protector

Information:

The surge protector and suitable coaxial cable are not included as standard with a Meinberg GPS Antenna, but can be ordered as an optional accessory.

Construction

The MBG S-PRO is a surge protector manufactured by Phoenix Contact (Type Designation CN-UB-280DC-BB) and designed to protect coaxial connections. It is patched directly into the antenna line and consists of a replaceable gas discharge tube that redirects the energy from the cable shielding to the ground potential when ignited.

Installation Conditions

To protect the building from possible surge voltages, the MBG S-PRO is installed at the point of entry of the antenna cable into the building. The MBG S-PRO must be shielded against water spray and water jets, either by means of a suitable enclosure (IP65) or a protected location.

Ideal Installation Conditions:

- Installation at the point where the antenna cable passes through the building wall
- Ground conductor cable from surge protector to grounding busbar as short as possible

Installation and Connection

This surge protector has no dedicated input or output polarity and therefore has no preferred installation orientation. It features Type-N female connectors at both ends.

Installation

1.
Fit the surge protector to the supplied mounting bracket as shown in the illustration.

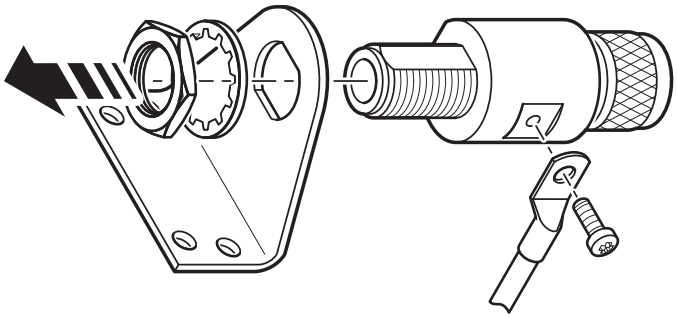

Fig. 7: Installation of the Surge Protector

2.
Connect the MBG S-PRO to a grounding busbar using a ground conductor cable that is as short as possible. It is also important for the ground terminal of the surge protector to be connected to the same bonding bar as the connected Meinberg system in order to prevent destructive potential differences.

3.
Connect the coaxial cable from the antenna to one of the surge protector connectors, then connect the other surge protector connector to the coaxial cable leading to the Meinberg reference clock.

Caution!

For safety reasons, the antenna cable must not exceed a certain length if there are no other devices such as a power distributor between the surge protector and the downstream electronic device with integrated surge protection at the mains connector level.

Please refer to the document **"Technical Specifications: MBG S-PRO Surge Protector"** in the appendix as well as the manufacturer's data sheet for detailed installation instructions and technical specifications for the surge protector.

Data Sheet (Download):

https://www.meinbergglobal.com/download/docs/shortinfo/english/cn-ub-280dc-bb_pc.pdf

10 Before You Start

10.1 Initial Network Configuration

Once the system has been successfully started, the initial set-up process can be launched.

The microSync is shipped with DHCP disabled and a static IP address configured. This means that a network connection must be established manually before you can set the device up properly.

There are two ways to perform the network configuration of your microSync:

- Configuration via a serial connection,
  see → Chapter 10.1.1, "Network Configuration via Serial Connection"
- Configuration via the Web Interface,
  see → Chapter 10.1.2, "Network Configuration via Web Interface"

10.1.1 Network Configuration via Serial Connection

The initial network configuration for the microSync can be performed via the serial terminal (USB interface). Any standard Micro-USB to USB-A cable can be used to connect the USB port on your PC with the Micro-USB of the microSync. Your PC will recognize this connnection as a serial connection.

Under Windows, you can use the Device Manager (under the group "*Ports (COM & LPT)*") to identify which COM interface is being used for communication.

In many commonly used Linux distibutions, the output of the terminal command `dmesg` can be used to identify which serial interface is being used for communication with the microSync. An example of a relevant entry would be:

```
[77833.359948] usb 1-1.2.1.6.3:  FTDI USB Serial Device converter now
attached to ttyUSB0
```

This information can be used to identify, for example, that the connection has been established on `/dev/ttyUSB0`.

You can use this to establish a serial connection with the system using suitable terminal software (such as PuTTY).

Use the following connection parameters:

Conn. Type: Serial
Serial Line: The serial interface identified above (e.g., *COM13* or `/dev/ttyUSB0`)
Speed: 115200
Framing: 8N1

Once the connection has been established, you will be prompted to enter a username and password. User: `admin` / Password: `timeserver`. Press the **Enter** key after each entry.

Once a connection has been successfully established, you can use the meinbergOS Wizard to perform the initial network configuration.

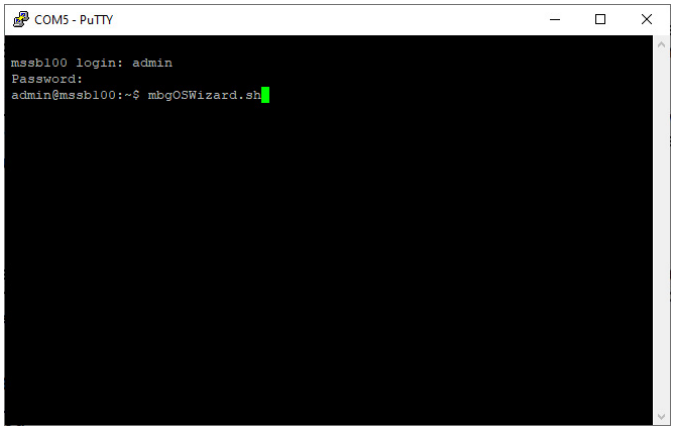

First, launch the wizard by entering `mbgOSWizard.sh`; you will be prompted to enter the password (Default: `timeserver`).

You can now select the physical network interface that you wish to use for management purposes. The next step is to enter the IPv4 address that you wish to assign to the selected port. The final step is to enter the subnet mask (e.g., `255.255.255.0`). You can then confirm your entries with '`y`'.

The initial network configuration process is now complete and you can close the Setup Wizard. All further configuration can be performed using the meinbergOS Web Interface.

Information:

If the microSync's network configuration has already been previously performed using the Web Interface, you will not be able to do this again using `mbgOSWizard.sh`.

10.1.2 Network Configuration via Web Interface

The network configuration for the microSync can be performed via the Web Interface. In its factory-shipped state, the microSync has the following network configuration:

Network Port LAN0

IPv4 Address:	`192.168.19.79`
Subnet Mask:	`255.255.255.0`
Gateway:	Undefined
DHCP:	Disabled

The PC from which the Web Interface will be accessed via a browser must be able to establish a network connection with the above address in the appropriate subnet. If the PC's network configuration or the network's topology or addressing prevent a connection from being established with the microSync, the network configuration of the PC will need to be (temporarily) changed and a different physical connection may need to be established (e.g., a direct network connection).

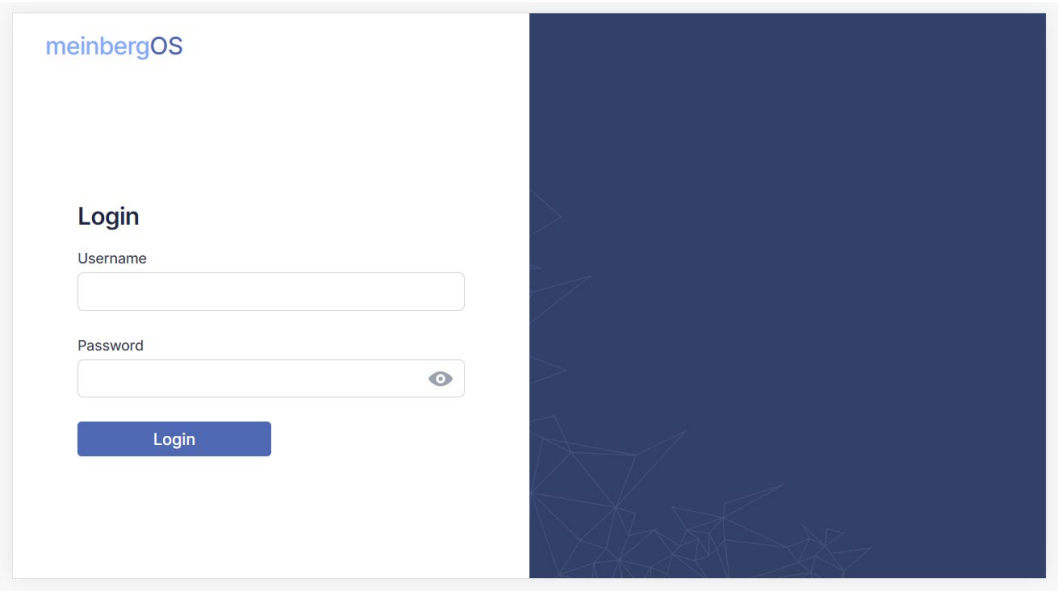

Open a web browser of your choice and open the address `https://192.168.19.79`. This should bring up the login page. Enter "`admin`" as the username and "`timeserver`" as the password.

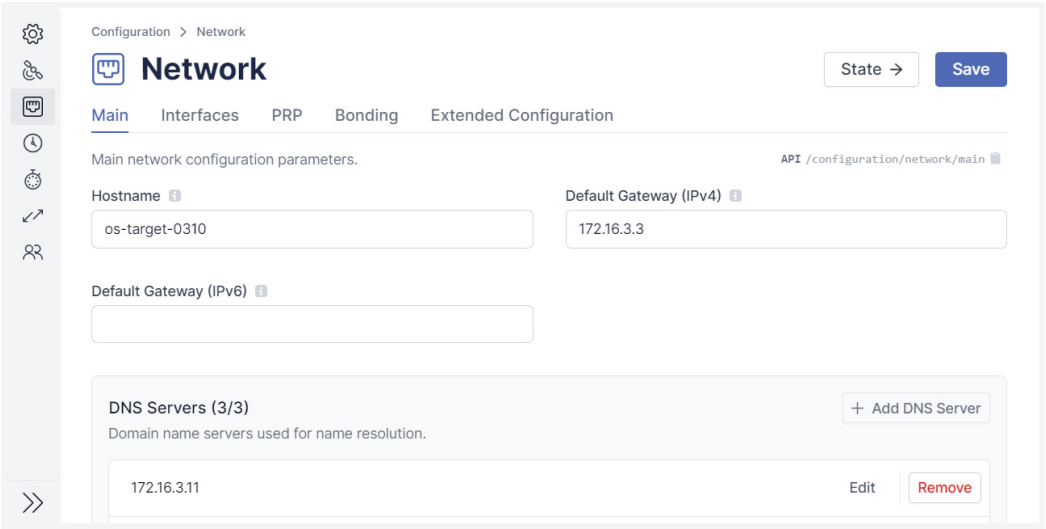

As soon as the Dashboard appears, open the "**Configuration**" section in the header bar and select the subsection "**Network**". You should ensure in particular that the network configuration is performed for the intended management interface ("**Interfaces**" tab) to ensure that it is accessible from the subnet.

Once you have performed the configuration, click on "**Save**" to save the changes.

10.2 Initial Start of Operation

10.2.1 Setup using the meinbergOS Web Interface

As of meinbergOS *2022.05.1*, your microSync system features a comprehensive Web Interface that you can use to perform most configuration and monitoring activities for your device.

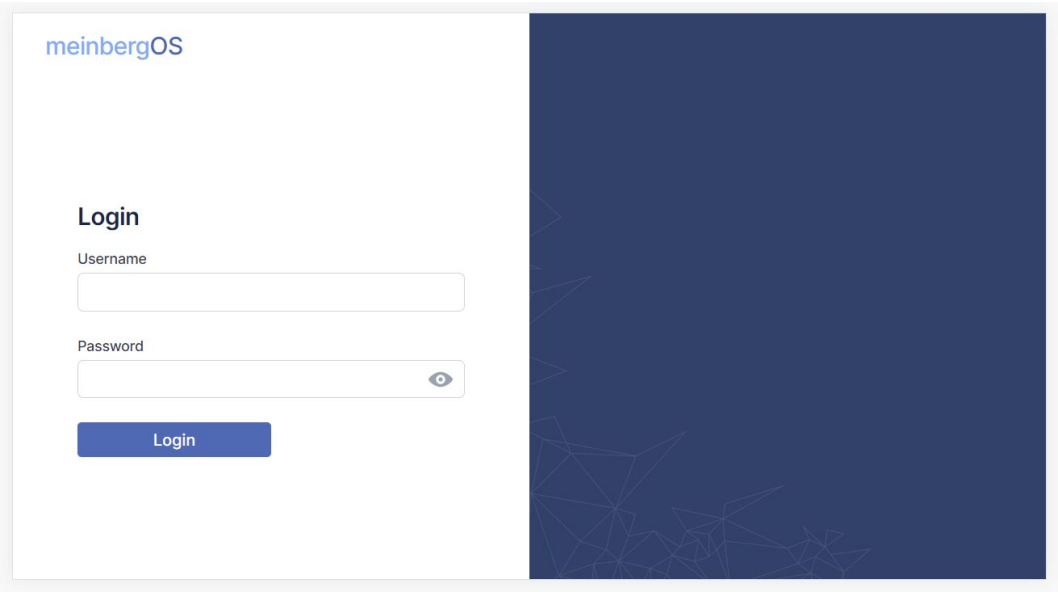

Figure 10.1: meinbergOS Web Interface Login Page

Once you have entered the IP address of your meinbergOS device into the address bar of your browser, the login page will be displayed (Fig. 10.1).

The default account details are:

Username: `admin`
Password: `timeserver`

Please refer to the chapter "**The meinbergOS Web Interface**" in the microSync Operations Manual for all further information about the meinbergOS Web Interface.

https://www.meinbergglobal.com/download/docs/manuals/english/microsync.pdf

11 Technical Appendix

11.1 Technical Specifications: microSync Chassis

Chassis Type: 9,5" (Half-Rack), 1U

Chassis Material: Sheet Steel

Temperature Range

Operation: –20 °C to +55 °C (–4 °F to +131 °F)

Storage: –30 °C to +70 °C (–22 °F to +158 °F)

Supported Relative Humidity

Operation: 5 to 95 % (non-condensing) at 40 °C (104 °F)

Operating Altitude

Operation: Max. 5,000 m above sea level (16,404 ft)

Atmospheric Pressure: 540 to 1,600 hPa

Acoustic Emissions: 0 dB (A)

IP Rating: IP30

Physical Dimensions:

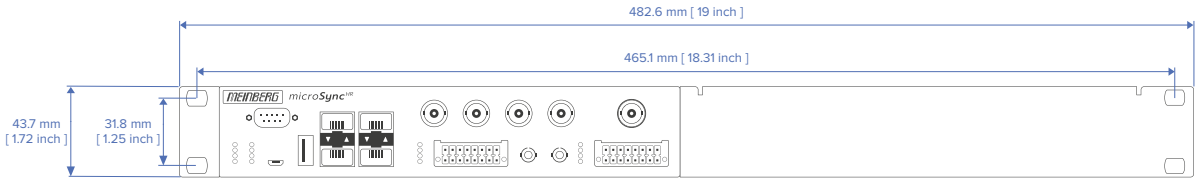

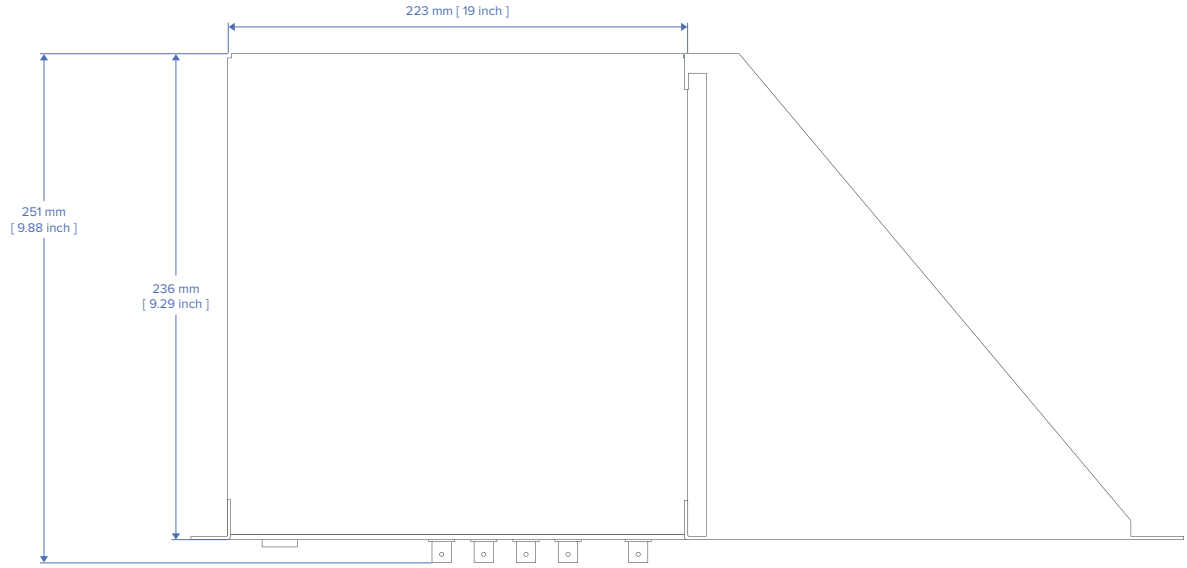

11.2 Description of Timecode Formats

Each IRIG format carries a designation comprising a letter followed by three numerical digits. The letter and each of the digits represents a characteristic property of the corresponding IRIG code.

The timecode formats supported will depend on your Meinberg product.

A002: 1000 pps, DCLS signal, pulse-width modulated, no carrier, BCD time-of-year

A003: 1000 pps, DCLS signal, pulse-width modulated, no carrier, BCD time-of-year, SBS time-of-day

A132: 1000 pps, AM sine-wave signal, 10 kHz carrier frequency, BCD time-of-year

A133: 1000 pps, AM sine-wave signal, 10 kHz carrier frequency, BCD time-of-year, SBS time-of-day

B002: 100 pps, DCLS signal, pulse-width modulated, no carrier, BCD time-of-year

B003: 100 pps, DCLS signal, pulse-width modulated, no carrier, BCD time-of-year, SBS time-of-day

B006: 100 pps, DCLS signal, pulse-width modulated, no carrier, BCD time-of-year, BCD calendar year

B007: 100 pps, DCLS signal, pulse-width modulated, no carrier, BCD time-of-year, BCD calendar year, SBS time-of-day

B122: 100 pps, AM sine-wave signal, 1 kHz carrier frequency, BCD time-of-year

B123: 100 pps, AM sine-wave signal, 1 kHz carrier frequency, BCD time-of-year, SBS time-of-day

B126: 100 pps, AM sine-wave signal, 1 kHz carrier frequency, BCD time-of-year, BCD calendar year

B127: 100 pps, AM sine-wave signal, 1 kHz carrier frequency, BCD time-of-year, BCD calendar year, SBS time-of-day

E002: 10 pps, DCLS signal, pulse-width modulated, no carrier, BCD time-of-year

E112: 10 pps, AM sine-wave signal, 100 kHz carrier frequency, BCD time-of-year

G002: 10000 pps, DCLS signal, pulse-width modulated, no carrier, BCD time-of-year

G006: 10000 pps, DCLS signal, pulse-width modulated, no carrier, BCD time-of-year, BCD calendar year

G142: 10000 pps, AM sine-wave signal, 100 kHz carrier frequency, BCD time-of-year

G146: 10000 pps, AM sine-wave signal, 100 kHz carrier frequency, BCD time-of-year, BCD calendar year

Abbreviations:

BCD = Binary-Coded Decimal, SBS = Straight Binary Seconds

In addition to the original IRIG standards, there are other specifications issued by other bodies that define specific extensions.

AFNOR: Code according to NF S87-500, 100 pps, AM sine-wave signal, 1 kHz carrier frequency, BCD time-of-year, complete date, SBS time-of-day, signal level specified by standard.

IEEE 1344: Code according to IEEE 1344-1995, 100 pps, AM sine-wave signal, 1 kHz carrier frequency, BCD time-of-year, SBS time-of-day, IEEE 1344 extensions for date, time zone, Daylight Saving Time, and leap seconds in Control Functions (CF) segment.

(See also table "**Structure of CF Segment in IEEE 1344 Code**")

IEEE C37.118: Identical to IEEE 1344, but with UTC offset +/- sign bit reversed

NASA 36: 100 pps, AM sine-wave signal, 1 kHz carrier frequency, time resolution: 10 ms (DCLS), 1 ms (AM carrier), BCD time-of-year: 30 bits - seconds, minutes, hours, and days

11.3 Programmable Pulse Signals

The programmable pulse outputs of microSync systems can be operated in the following modes:

Idle
Selecting "**Idle**" allows individual programmable pulse outputs to be disabled.

Timer
In "**Timer**" mode, the output simulates a timer with a fixed daily schedule. It is possible to configure three switch-on and three switch-off days for each day and each output. In order to set a timer, both the switch-on time ("**ON**") and the corresponding switch-off time ("**OFF**") must be set. If the switch-on time is later than the switch-off time, the switching scheduler will interpret this to mean that the switch-off time is on the next day.

Thus, if a program was set with a switch-on time of *23:45:00* and a switch-off time of *0:30:00*, this would cause the output to be enabled on day *n* at 11:45 p.m., and then to be disabled on day *n+1* at 12:30 a.m. If any of these three programs are to be left disabled, simply enter the same times into the **ON** and **OFF** fields. The "Active" selector specifies the active state for the timer periods. Selecting "*Active: high*" will put the output in a low state outside of switch-on periods and in a high state during switch-on periods.

Single Shot
"**Single Shot**" mode generates a single pulse of defined length once per day.
The time of day when the pulse is to be generated can be set via the "**Time**" value. The value "**Length**" allows the pulse length to be set in 10 ms increments and may be any value in the range of *10 ms* to *10 s*. Entries that are not multiples of 10 ms will be rounded down.

Cyclic Pulse
"**Cyclic Pulse**" mode is used to generate cyclically repeating pulses. The time between two pulses is defined, and this value must always be provided in hours, minutes, and seconds. It is important to note that the pulse train is always synchronized with 0:00.00 local time, so that the first pulse on any given day will always be output at midnight, and is repeated at the specified cycle interval henceforth. Thus, if a cycle duration of *2 s* is specified, this will result in pulses being triggered at 0:00.00, 0:00.02, 0:00.04 and so on. While it is possible to set any cycle time between 0 and 24 hours, these repetitions are usually only useful if the time between pulses is always the same. For example, if a cycle time of *1:45.00* is set, this will output pulses at intervals of 6300 seconds. However, between the last pulse of any given day and the pulse at midnight on the following day, there will be an interval of just 4500 seconds.

Pulse per Second, per Min, per Hour Modes
These modes generate pulses of defined length once per second, once per minute, or once per hour. The configuration options for all three modes are the same. The value "**Pulse Length**" allows the pulse length to be set in 10 ms increments and may be any value in the range of *10 ms* to *10 s*.

DCF77 Marks
In "**DCF77 Marks**" mode the selected output simulates the time string transmitted by the German DCF77 time code transmitter. The output pulses are the 100 ms and 200 ms pulses (logical 0/1) typical for the DCF77 code. The absence of the 59-second marker is used to signal the start of a new minute.

The "**Timeout**" field can be used to enter how many minutes the system should wait while in free-run mode before DCF77 simulation is suspended. Entering *0* here will disable the timeout function.

Sync Modes

There are three different modes available for outputting the synchronization state of the clock.

Position OK, Time Sync und All Sync

The "**Position OK**" mode outputs a signal through the output whenever the GPS receiver is receiving enough satellites to determine its position.

In "**Time Sync**" mode, a signal is passed through the output while the clock's internal timebase is synchronized to the GPS time. The "**All Sync**" mode requires both of the above states to be true?sufficient satellites for geopositioning and synchronization of internal timebase to GPS time?for a signal to be passed through the output.

DCLS Timecode

DC level shift timecode. The timecode output here is configured via the meinbergOS Web Interface in the "Configuration → Clock → I/O Config → IRIG Output" menu.

1 MHz Frequency, 5 MHz Frequency, 10 MHz Frequency

These modes are used to output a fixed frequency, using a PPS signal as an absolute phase reference (i.e., the falling edge of the signal is synchronized with the rising edge of the PPS signal).

Note: If the system is set to output a 1, 5, or 10 MHz frequency, these frequency signals will only be output if the oscillator is phase-locked to its reference, regardless of the output condition setting ("if sync" or "always"). As such, it may take some time for the output to generate the selected frequency even after the clock is time-synchronized to its reference.

If the clock loses synchronization with its reference, the continued frequency output will depend on the output condition setting. If the output is set to "always", the frequency will continue to be output in free-run mode until the clock is resynchronized with a reference signal. If the output is set to "if sync", the frequency output will be suspended upon loss of synchronization. In either case, once the reference signal is re-established, the clock will suspend frequency output if a deviation of $\pm 10\ \mu s$ is detected and will only resume it once the oscillator achieves phase lock again.

DCF77-like M59

Sends a 500 ms pulse at the 59-second mark.

The "**Timeout**" field can be used to enter how many minutes the system should wait while in free-run mode before DCF77 simulation is suspended. Entering *0* here will disable the timeout function.

Synth. Frequency

The output of the frequency synthesizer is also configured via the "Outputs" menu.

PTTI 1PPS

This mode is used to pass a PPS signal of 20 μs length through the output.

11.4 Supported Time Strings

11.4.1 Meinberg Standard Time String

The Meinberg Standard time string is a sequence of 32 ASCII characters, starting with the character `<STX>` (Start of Text, ASCII code 02h) and terminated with the character `<ETX>` (End of Text, ASCII code 03h). The format is as follows:

`<STX>D:`*`dd.mm.yy`*`;T:`*`w`*`;U:`*`hh.mm.ss`*`;`*`uvxy`*`<ETX>`

The letters printed in italics are replaced by ASCII-formatted numbers, whereas the other characters are directly part of the time string. The groups of characters as defined below:

`<STX>`	Start of Text, ASCII code 02h sent with one-bit accuracy at the change of each second		
`dd.mm.yy`	The date:		
	`dd`	Day of the month	(01–31)
	`mm`	Month	(01–12)
	`yy`	Year of the Century	(00–99)
`w`	The day of the week		(1–7, 1 = Monday)
`hh.mm.ss`	The time:		
	`hh`	Hours	(00–23)
	`mm`	Minutes	(00–59)
	`ss`	Seconds	(00–59, or 60 during leap second)
`uv`	Clock status characters (depending on clock type):		
	u:	"#"	GPS: Clock is in free-run mode (no exact synchronization) PZF: Time frame not synchronized DCF77: Clock has not synchronized since last reset
	" "	(Space, 20h) GPS: Clock is synchronized (base accuracy is reached) PZF: Time pattern synchronized DCF77: Clock has synchronized since last reset	
	v:	"*" GPS: Receiver has not yet verified its position PZF/DCF77: Clock currently in free-run mode	
	" "	(Space, 20h) GPS: Receiver has determined its position PZF/DCF77: Clock is synchronized with transmitter	
`x`	Time zone indicator:		
	"U"	UTC	Universal Time Coordinated, formerly GMT
	" "	CET	European Standard Time, Daylight Saving Time active
	"S"	(CEST) Central European Summer Time, Daylight Saving Time inactive	
`y`	Announcement of clock jump during last hour before jump enters effect:		
		"!"	Announcement of start or end of Daylight Saving Time
		'A'	Announcement of leap second insertion
		" "	(Space, 20h) nothing announced
`<ETX>`	End of Text, ASCII code 03h		

11.4.2 Meinberg GPS Time String

The Meinberg GPS time string is a sequence of 36 ASCII characters, starting with the `<STX>` (Start of Text) character and ending with the `<ETX>` (End of Text) character. Unlike the Meinberg Standard time string, it does not contain UTC time or time adjusted to any local time zone. Instead, it contains GPS time without the UTC adjustments. The format is as follows:

`<STX>D:`*`dd.mm.yy;T:w;U:hh.mm.ss;uvGy;lll`*`<ETX>`

The letters printed in *italics* are replaced by ASCII-formatted numbers, whereas the other characters are directly part of the time string. The groups of characters as defined below:

`<STX>`	Start of Text, ASCII code 02h		
`dd.mm.yy`		The date:	
	dd	Day of the month	(01–31)
	mm	Month	(01–12)
	yy	Year of the Century	(00–99)
`w`	The day of the week		(1–7, 1 = Monday)
`hh.mm.ss`	The time:		
	hh	Hours	(00–23)
	mm	Minutes	(00–59)
	ss	Seconds	(00–59, or 60 while leap second)
`uv`	Clock status characters:		
	u:	"#"	Clock is in free-run mode (no exact synchronization)
		" "	(Space, ASCII code 20h) Clock is synchronized (base accuracy is achieved)
	v:	"*"	Receiver has not yet verified its position
		" "	(Space, ASCII code 20h) Receiver has determined its position
`G`	Time zone identifier "GPS Time"		
`y`	Announcement of clock jump during last hour before discontinuity comes into effect:		
	"A'"	Announcement of leap second insertion	
	" "	(Space, ASCII code 20h) nothing announced	
`lll`	Number of leap seconds between GPS time and UTC (UTC = GPS time + number of leap seconds)		
`<ETX>`	End of Text, ASCII code 03h		

11.4.3 Meinberg Capture Time String

The Meinberg Capture time string is a sequence of 31 ASCII characters, terminated with the sequence <CR> (Carriage Return, ASCII code 0Dh) and <LF> (Line Feed, ASCII code 0Ah). The format is as follows:

CH*x*<*SP*>*dd.mm.yy_hh:mm:ss.fffffff*<CR><LF>

The letters printed in italics are replaced by ASCII-formatted numbers, whereas the other characters are directly part of the time string. The groups of characters as defined below:

x	0 or 1, number of input		
<SP>	Space (ASCII code 20h)		
dd.mm.yy	Capture date:		
	dd	Day of the month	(01–31)
	mm	Month	(01–12)
	yy	Year without century	(00–99)
hh:mm:ss.fffffff	Capture Time:		
	hh	Hours	(00–23)
	mm	Minutes	(00–59)
	ss	Seconds	(00–59, or 60 during leap second)
	fffffff	Fractions of second, 7 digits	
<CR>	Carriage Return, ASCII code 0Dh		
<LF>	Line Feed, ASCII code 0Ah		

11.4.4 SPA Time String

The SPA time string is a sequence of 32 ASCII characters, starting with the string “>900WD:” and terminated with the character <CR> (Carriage Return). The format is as follows:

>900WD:*yy-mm-dd_hh.mm;ss.fff:cc*<CR>

The letters printed in italics are replaced by ASCII numbers whereas the other characters are unalterable parts of the time string. The groups of characters are as defined below:

yy-mm-dd	Current Date:		
	yy	Year without century	(00–99)
	mm	Month	(01–12)
	dd	Day of the month	(01–31)
	“ ”	(Space, ASCII code 20h)	
hh.mm;ss.fff	Current Time:		
	hh	Hours	(00–23)
	mm	Minutes	(00–59)
	ss	Seconds	(00–59, or 60 during leap second)
	fff	Milliseconds	(000–999)
cc	Checksum This is calculated as the XOR sum of the preceding characters. The resultant 8-bit value is reported as a hex value in the form of two ASCII characters (0-9 or A-F)		
<CR>	Carriage Return		ASCII code 0Dh

11.4.5 SAT Time String

The SAT time string is a sequence of 29 ASCII characters, starting with the character `<STX>` (Start of Text, ASCII code 02h) and terminated with the character `<ETX>` (End of Text, ASCII code 03h). The format is as follows:

`<STX>`*dd.mm.yy/w/hh:mm:ssxxxxuv*`<ETX>`

The letters printed in italics are replaced by ASCII-formatted numbers, whereas the other characters are directly part of the time string. The groups of characters as defined below:

`<STX>`	Start of Text, ASCII code 02h sent with one-bit accuracy at the change of each second		
`dd.mm.yy`	The date:		
	dd	Day of the month	(01–31)
	mm	Month	(01–12)
	yy	Year without century	(00–99)
`w`	The day of the week (1 = Monday)		
`hh:mm:ss`	The current time:		
	hh	Hours	(00–23)
	mm	Minutes	(00–59)
	ss	Seconds	(00–59, or 60 during leap second)
`xxxx`	Time zone identifier:		
	"UTC"	Universal Time Coordinated, formerly GMT	
	"CET"	European Standard Time, daylight saving disabled	
	"CEST"	Central European Summer Time, Daylight Saving Time active	
`u`	Clock status characters:		
	"#"	Clock has not synchronized since last reset	
	" "	(Space, ASCII code 20h) Clock has synchronized since last reset	
`v`	Announcement for time jump during last hour before event:		
	"!"	Announcement of start or end of Daylight Saving Time	
	" "(Space, ASCII code 20h) nothing announced		
`<CR>`	Carriage Return, ASCII code 0Dh		
`<LF>`	Line Feed, ASCII code 0Ah		
`<ETX>`	End of Text, ASCII code 03h		

11.4.6 Uni Erlangen Time String (NTP)

The Uni Erlangen time string (NTP) is a sequence of 66 ASCII characters, starting with the character `<STX>` (Start of Text, ASCII code 02h) and terminated with the character `<ETX>` (End of Text, ASCII code 03h). The format is as follows:

`<STX>`*dd.mm.yy; w; hh:mm:ss; voo:oo; acdfg i;bbb.bbbbn lll.llle hhhhm*`<ETX>`

The letters printed in italics are replaced by ASCII-formatted numbers, whereas the other characters are directly part of the time string. The groups of characters as defined below:

`<STX>` Start of Text, ASCII code 02h sent with one-bit accuracy at the change of each second

`dd.mm.yy` The date:

dd	Day of the month	(01–31)
mm	Month	(01–12)
yy	Year (without century)	(00–99)

`w` The day of the week (1–7, 1 = Monday)

`hh.mm.ss` The time:

hh	Hours	(00–23)
mm	Minutes	(00–59)
ss	Seconds	(00–59, or 60 during leap second)

`v` Positive/negative sign for offset of local time zone relative to UTC

`oo:oo` Offset of local time zone relative to UTC in hours and minutes

`ac` Clock status:

a:	"#"	Clock has not synchronized since reset
	" "	(Space, ASCII code 20h) Clock has synchronized since reset
c:	"*"	GPS receiver has not verified its position
	" "	(Space, ASCII code 20h) GPS receiver has determined its position

`d` Time zone identifier:

"S"	CEST	Central European Summer Time
" "	CET	Central European Time

`f` Announcement of clock jump during last hour before discontinuity comes into effect:

"!"	Announcement of start or end of Daylight Saving Time
" "	(Space, ASCII code 20h) nothing announced

`g` Announcement of clock jump during last hour before discontinuity comes into effect:

"A'"	Announcement of leap second
" "	(Space, ASCII code 20h) nothing announced

`i` Leap second

"L"	Leap second is currently to be inserted (only active in 60th second)
" "	(Space, ASCII code 20h) No leap second announced

`bbb.bbbb` Geographical latitude of the receiver position in degrees
Leading zeroes are padded with spaces (ASCII code 20h)

`n`	Geographical hemisphere, possible characters are: "N" North of Equator "S" South of Equator
`lll.llll`	Geographical longitude of the receiver position in degrees Leading zeroes are padded with spaces (ASCII code 20h)
`e`	Prime meridian hemisphere, possible characters are: "E" East of Greenwich Meridian "W" West of Greenwich Meridian
`hhhh`	Altitude in meters of receiver position above WGS84 ellispoid Leading zeroes are padded with spaces (ASCII code 20h)
`<ETX>`	End of Text, ASCII code 03h

11.4.7 NMEA 0183 String (RMC)

The NMEA 0183 RMC time string is a sequence of 65 ASCII characters, starting with the string "$GPRMC" and terminated with the sequence <CR> (Carriage Return, ASCII code 0Dh) und <LF> (Line Feed, ASCII code 0Ah). The format is as follows:

$GPRMC,*hhmmss.ff*,A,*bbbb.bb*,*n*,*lllll.ll*,*e*,*0.0*,*0.0*,*ddmmyy*,*0.0*,*a***hh*<CR><LF>

The letters printed in italics are replaced by ASCII-formatted numbers, whereas the other characters are directly part of the time string. The groups of characters as defined below:

$	Start character, ASCII code 24h sent with one-bit accuracy at the change of each second		
GP	Device ID, in this case "GP" for GPS		
RMC	Message type ID, in this case "RMC"		
hhmmss.ss	The current time:		
	hh	Hours	(00–23)
	mm	Minutes	(00–59)
	ss	Seconds	(00–59, or 60 during leap second)
	ff	Fractional seconds	(1/10 ; 1/100)
A	Status (A = Time data valid, V = Time data not valid)		
bbbb.bb	Geographical latitude of the receiver position in degrees Leading zeroes are padded with spaces (ASCII code 20h)		
n	Geographical hemisphere, possible characters are:		
	"N"	North of Equator	
	"S"	South of Equator	
lllll.ll	Geographical longitude of the receiver position in degrees Leading zeroes are padded with spaces (ASCII code 20h)		
e	Prime meridian hemisphere, possible characters are:		
	"E"	East of Greenwich Meridian	
	"W"	West of Greenwich Meridian	
0.0,0.0	Speed over the ground in knots and track angle in degrees. With a Meinberg GPS clock, these values are always 0.0, with GNS clocks, the values are calculated by the receiver for mobile applications.		
ddmmyy	Current Date:		
	dd	Day of the month	(01–31)
	mm	Month	(01–12)
	yy	Year of Century	(00–99)
a	Magnetic variation E/W		
hh	Checksum (XOR sum of all characters except "$" and "*")		
<CR>	Carriage Return, ASCII code 0Dh		
<LF>	Line Feed, ASCII code 0Ah		

11.4.8 NMEA 0183 Time String (GGA)

The NMEA 0183 GGA string is a sequence of characters starting with the string "$GPGGA" and ending with the characters <CR> (Carriage Return) and <LF> (Line Feed). The format is as follows:

$GPGGA,*hhmmss.ff*,*bbbb.bbbbb*,*n*,*lllll.ll*,*e*,*A*,*vv*,*hhh.h*,*aaa.a*,M,
ggg.g,M,,*0***cs*<CR><LF>

The letters printed in italics are replaced by ASCII-formatted numbers, whereas the other characters are directly part of the time string. The groups of characters as defined below:

$	Start character, ASCII code 24h sent with one-bit accuracy at the change of each second
GP	Device ID, in this case "GP" for GPS
GGA	Message type ID, in this case "GGA"
hhmmss.ss	The current time: *hh* Hours (00–23) *mm* Minutes (00–59) *ss* Seconds (00–59, or 60 while leap second) *ff* Fractional seconds (1/10 ; 1/100)
bbbb.bbbbb	Geographical latitude of receiver position in degrees Leading zeroes are padded with spaces (ASCII code 20h)
n	Geographical hemisphere, possible characters are: "N" North of Equator "S" South of Equator
lllll.lllll	Geographical longitude of the receiver position in degrees Leading zeroes are padded with spaces (ASCII code 20h)
e	Prime meridian hemisphere, possible characters are: "E" East of Greenwich Meridian "W" West of Greenwich Meridian
A	Position determined (1 = yes, 0 = no)
vv	Number of satellites used (0–12)
hhh.h	HDOP (Horizontal Dilution of Precision)
aaa.h	Mean Sea Level Altitude (MSL Altitude = WGS84 Altitude - Geoid Separation)
M	Meters (unit as fixed value)
ggg.g	Geoid Separation (WGS84 Altitude - MSL Altitude)
M	Meters (unit as fixed value)
cs	Checksum (XOR sum of all characters except "$" and "*")
<CR>	Carriage Return, ASCII code 0Dh
<LF>	Line Feed, ASCII code 0Ah

11.4.9 NMEA 0183 Time String (ZDA)

The NMEA 0183 ZDA time string is a sequence of 38 ASCII characters starting with the string "$GPZDA" and ending with the characters <CR> (Carriage Return) and <LF> (Line Feed). The format is:

$GPZDA,*hhmmss.ss*,*dd*,*mm*,*yyyy*,*HH*,*II***cs*<CR><LF>

ZDA - Time and Date: UTC, day, month, year, and local time zone.

The letters printed in italics are replaced by ASCII-formatted numbers, whereas the other characters are directly part of the time string. The groups of characters are as defined below:

$	Start character, ASCII code 24h sent with one-bit accuracy at change of second		
hhmmss.ss	UTC time:		
	hh	Hours	(00–23)
	mm	Minutes	(00–59)
	ss	Seconds	(00–59, or 60 during leap second)
HH,II	The local time zone (offset to UTC):		
	HH	Hours	(00–±13)
	II	Minutes	(00–59)
dd,mm,yy	The date:		
	dd	Day of Month	(01–31)
	mm	Month	(01–12)
	yyyy	Year	(0000–9999)
cs	Checksum (XOR of all characters except "$" and "*")		
<CR>	Carriage Return (ASCII code 0Dh)		
<LF>	Line Feed (ASCII code 0Ah)		

11.4.10 Computime Time String

The Computime time string is a sequence of 24 ASCII characters, starting with the character `T` and terminated with the character `<LF>` (Line Feed, ASCII code 0Ah). The format is as follows:

`T:`*`yy:mm:dd:ww:hh:mm:ss`*`<CR><LF>`

The letters printed in italics are replaced by ASCII numbers whereas the other characters are unalterable parts of the time string. The groups of characters as defined below:

`T`	Start character Sent with one-bit accuracy at the change of each second		
`yy:mm:dd`	The current date:		
	`yy`	Year without century	(00–99)
	`mm`	Month	(01–12)
	`dd`	Day of the month	(01–31)
	`ww`	Day of the week	(01–07, 01 = Monday)
`hh:mm:ss`	The current time:		
	`hh`	Hours	(00–23)
	`mm`	Minutes	(00–59)
	`ss`	Seconds	(00–59, or 60 during leap second)
`<CR>`	Carriage Return, ASCII code 0Dh		
`<LF>`	Line Feed, ASCII code 0Ah		

11.4.11 RACAL Time String

The RACAL time string is a sequence of 16 ASCII characters started by a `X` character and terminated by the `<CR>` (Carriage Return, ASCII code 0Dh) character. The format is as follows:

`XGU`*`yymmddhhmmss`*`<CR>`

The letters printed in *italics* are replaced by ASCII-formatted numbers, whereas the other characters are directly part of the time string. The groups of characters are as defined below:

`X`	Start character (ASCII code 58h) Sent with one-bit accuracy at the change of each second		
`G`	Control character (ASCII code 47h)		
`U`	Control character (ASCII code 55h)		
`yymmdd`	Current date:		
	`yy`	Year of Century	(00–99)
	`mm`	Month	(01–12)
	`dd`	Day of Month	(01–31)
`hh:mm:ss`	Current time:		
	`hh`	Hours	(00–23)
	`mm`	Minutes	(00–59)
	`ss`	Seconds	(00–59, or 60 during leap second)
`<CR>`	Carriage Return (ASCII code 0Dh)		

11.4.12 SYSPLEX-1 Time String

The SYSPLEX 1 time string is a sequence of 16 ASCII characters, starting with the character <SOH> (Start of Header, ASCII code 01h) and terminated with the character <LF> (Line Feed, ASCII code 0Ah).

Important!

To ensure that the time string can be correctly output and displayed through your terminal software of choice, a "C" must be sent (once, without quotes).

The format is as follows:

<SOH>*ddd:hh:mm:ssq*<CR><LF>

The letters printed in italics are replaced by ASCII numbers whereas the other characters are unalterable parts of the time string. The groups of characters as defined below:

<SOH>	Start of Header (ASCII code 01h) sent with one-bit accuracy at the change of each second			
ddd	Day of the Year		(001–366)	
hh:mm:ss	The current time:			
	hh	Hours	(00–23)	
	mm	Minutes	(00–59)	
	ss	Seconds	(00–59, or 60 during leap second)	
	q	Clock Status:	Space (ASCII code 20h)	Time Sync (GPS Lock)
			"?" (ASCII code 3Fh)	No Time Sync (GPS Fail)
<CR>	Carriage Return, ASCII code 0Dh			
<LF>	Line Feed, ASCII code 0Ah			

11.4.13 ION Time String

The ION time string is a sequence of 16 ASCII characters, starting with the character <SOH> (Start of Header, ASCII code 01h) and terminated with the character <LF> (Line Feed, ASCII code 0Ah). The format is as follows:

<SOH>*ddd:hh:mm:ssq*<CR><LF>

The letters printed in italics are replaced by ASCII-formatted numbers, whereas the other characters are directly part of the time string. The groups of characters as defined below:

<SOH>	Start of Header (ASCII code 01h) sent with one-bit accuracy at the change of each second			
ddd	Day of Year		(001–366)	
hh:mm:ss	Current time:			
	hh	Hours	(00–23)	
	mm	Minutes	(00–59)	
	ss	Seconds	(00–59, or 60 while leap second)	
	q	Quality Indicator	Space (ASCII code 20h)	Time Sync (GPS Lock)
			"?" (ASCII code 3Fh)	No Time Sync (GPS Fail)
<CR>	Carriage Return (ASCII code 0Dh)			
<LF>	Line Feed (ASCII code 0Ah)			

11.4.14 ION Blanked Time String

The ION time string is a sequence of 16 ASCII characters, starting with the character <SOH> (Start of Header, ASCII code 01h) and terminated with the character <LF> (Line Feed, ASCII code 0Ah). The format is as follows:

<SOH>*ttt:hh:mm:ssq*<CR><LF>

Important!

The blanking interval lasts for 2 minutes and 30 seconds and is inserted every five minutes.

The letters printed in italics are replaced by ASCII numbers whereas the other characters are unalterable parts of the time string. The groups of characters as defined below:

<SOH>	Start of Header (ASCII code 01h) sent with one-bit accuracy at the change of each second			
ddd	Day of the year		(001–366)	
hh:mm:ss	The current time:			
	hh	Hours	(00–23)	
	mm	Minutes	(00–59)	
	ss	Seconds	(00–59, or 60 during leap second)	
	q	Clock Status:	Space (ASCII code 20h)	Time Sync (GPS Lock)
			"?" (ASCII code 3Fh)	No Time Sync (GPS Fail)
<CR>	Carriage Return, ASCII code 0Dh			
<LF>	Line Feed, ASCII code 0Ah			

11.4.15 IRIG-J Timecode

The IRIG-J timecode consists of a string of ASCII characters sent in “701” format, i.e.,:

- 1 start bit
- 7 data bits
- 1 parity bit (odd)
- 1 stop bit

The start of the second is marked by the leading edge of the start bit of the string. The string is 15 characters long and is sent once a second at a baud rate of 300 or greater. The format is as follows:

`<SOH>`*`DDD:HH:MM:SS`*`<CR><LF>`

The letters printed in italics are replaced by ASCII numbers whereas the other characters are unalterable elements of the string. The groups of characters as defined below:

`<SOH>`	Start of Header (ASCII code 01h)
`DDD`	Day of the year (ordinal date, 1–366)
`HH`, `MM`, `SS`	Time of the start bit in hours (`HH`), minutes (`MM`), seconds (`SS`)
`<CR>`	Carriage Return, ASCII code 0Dh
`<LF>`	Line Feed, ASCII code 0Ah

11.4.16 6021 Time String

The 6021 time string is a sequence of 18 ASCII characters starting with the <STX> (Start of Text, ASCII code 02h) ASCII control character and terminated with the sequence <LF> (Line Feed, ASCII code 0Ah), <CR> (Carriage Return, ASCII code 0Dh), <ETX> (End of Text, ASCII code 03h).

It is broadly identical to the → "Freelance Time String", but with a different order to the termination sequence.

The format is as follows:

<STX>*C9hhmmssddmmyy*<LF><CR><ETX>

The letters printed in italics are replaced by ASCII numbers whereas the other characters are part of the time string. The groups of characters as defined below:

<STX> Start of Text, ASCII code 02h

C Clock status. This is represented as an ASCII nibble*, whereby each bit in the binary sequence has the following meaning:

Bit 0 (LSB)	Leap second announced (1) / not announced (0)
Bit 1	Leap second active (1) / not active (0)
Bit 2	Real-time clock time valid (1) / invalid (0)
Bit 3 (MSB)	Clock is synchronized (1) / not synchronized (0)

Example: If the clock outputs C (ASCII code 0x43h) at this position, this corresponds to a binary value of *1100*, indicating that the RTC time is valid and the clock is synchronized, and that no leap second has been announced, nor is one in effect.

9 UTC status of clock and day of the week. This is represented as an ASCII nibble*, whereby the three least significant bits represent the day of the week and may be any value between 1 and 7 (corresponding to Monday to Sunday). The most significant bit represents the UTC state and will be 1 if set to UTC and 0 if it is a local time zone. Thus, if the clock is outputting local (non-UTC) time, this will be in a range of 1–7, whereas if the clock is outputting UTC time, this value will be in a range of 9–F.

Example: If the clock outputs 9 (ASCII code 0x39h) at this position, this corresponds to a binary value of *1001*. The most significant bit of *1* here indicates that the clock is running on UTC time, while the 3-bit value represented by the least significant bits *001* indicates that the day is Monday.

hhmmss Current time:

hh	Hours	(00–23)
mm	Minutes	(00–59)
ss	Seconds	(00–59, or 60 during leap second)

ddmmyy Current date:

dd	Day	(01–31)
mm	Month	(01–12)
yy	Last two digits of year	(00–99)

`<LF>`	Line Feed (ASCII code 0Ah)
`<CR>`	Carriage Return (ASCII code 0Dh)
`<ETX>`	End of Text (ASCII code 03h)

* With ASCII nibbles, the actual ASCII character itself (`0-9`, `A-F`, ASCII codes *0x30h–0x39h* and *0x41h–0x46h*) represents the hexadecimal equivalent of a 4-bit binary sequence. For example, if the clock outputs "`A`" at these positions, this is equivalent to a binary sequence of *0x1010b*. Please note that it is not the binary equivalent of the ASCII code (*0x41h*) itself.

11.4.17 Freelance Time String

The Freelance time string is a sequence of 18 ASCII characters starting with the `<STX>` (Start of Text, ASCII code 02h) ASCII control character and terminated with the sequence `<CR>` (Carriage Return, ASCII code 0Dh), `<LF>` (Line Feed, ASCII code 0Ah), `<ETX>` (End of Text, ASCII code 03h).

It is broadly identical to the → "6021 Time String", but with a different order to the termination sequence.

The format is as follows:

`<STX>`*`C9hhmmssddmmyy`*`<CR><LF><ETX>`

The letters printed in italics are replaced by ASCII numbers whereas the other characters are part of the time string. The groups of characters as defined below:

`<STX>` Start of Text, ASCII code 02h

`C` Clock status. This is represented as an ASCII nibble*, whereby each bit in the binary sequence has the following meaning:

Bit 0 (LSB)	Leap second announced (1) / not announced (0)
Bit 1	Leap second active (1) / not active (0)
Bit 2	Real-time clock time valid (1) / invalid (0)
Bit 3 (MSB)	Clock is synchronized (1) / not synchronized (0)

Example: If the clock outputs `C` (ASCII code 0x43h) at this position, this corresponds to a binary value of *1100*, indicating that the RTC time is valid and the clock is synchronized, and that no leap second has been announced, nor is one in effect.

`9` UTC status of clock and day of the week. This is represented as an ASCII nibble*, whereby the three least significant bits represent the day of the week and may be any value between 1 and 7 (corresponding to Monday to Sunday). The most significant bit represents the UTC state and will be 1 if set to UTC and 0 if it is a local time zone. Thus, if the clock is outputting local (non-UTC) time, this will be in a range of 1–7, whereas if the clock is outputting UTC time, this value will be in a range of 9–F.

Example: If the clock outputs `9` (ASCII code 0x39h) at this position, this corresponds to a binary value of *1001*. The most significant bit of *1* here indicates that the clock is running on UTC time, while the 3-bit value represented by the least significant bits *001* indicates that the day is Monday.

`hhmmss` Current time:

`hh`	Hours	(00–23)
`mm`	Minutes	(00–59)
`ss`	Seconds	(00–59, or 60 during leap second)

`ddmmyy` Current date:

`dd`	Day	(01–31)
`mm`	Month	(01–12)
`yy`	Last two digits of year	(00–99)

`<CR>`	Carriage Return (ASCII code 0Dh)
`<LF>`	Line Feed (ASCII code 0Ah)
`<ETX>`	End of Text (ASCII code 03h)

* With ASCII nibbles, the actual ASCII character itself (`0-9`, `A-F`, ASCII codes *0x30h–0x39h* and *0x41h–0x46h*) represents the hexadecimal equivalent of a 4-bit binary sequence. For example, if the clock outputs "`A`" at these positions, this is equivalent to a binary sequence of *0x1010b*. Please note that it is not the binary equivalent of the ASCII code (*0x41h*) itself.

11.5 Configuration - Options

Receiver Options

RECEIVER TYPE	SIGNAL TYPE	VALUE	CONNECTOR
Meinberg GPS IF, 12-Channel	IF (Meinberg Antenna)	15 V DC	BNC
Meinberg GNS-UC GPS/Galileo IF	IF (Meinberg Antenna)	15 V DC	BNC
GNSS (GPS, GLONASS, Galileo, BeiDou), 72-Channel	L1/E1/B1 Band	5 V DC	SMA

Oscillator Options

TYPE	HOLDOVER PERFORMANCE (1 DAY)	HOLDOVER PERFORMANCE (1 YEAR)
OCXO SQ	+- 65 μs	+- 4.7 s
OCXO HQ	+- 10 μs	+- 788 ms
OCXO DHQ	+- 4.5 μs	+- 158 ms

PTP Performance Levels

Performance-Level	Max. Unicast Clients	Max. Delay Requests*
PL-A	8	1024
PL-B	256	32786
PL-C**	512	65536

** per Second | Hybrid Mode | ** with PTPv1 Support*

11.6 Protocols and Profiles

NETWORK PROTOCOLS	IEEE 1588 PROFILES
IPv4, IPv6	Custom Profil
NTPv3, NTPv4	Default E2E IEEE1588-2008 / Default P2P IEEE1588-2008
PTPv1, PTPv2	Power IEEE C37.238-2011 / Power IEEE C37.238-2017
IEC 62439-3 (PRP)	Telecom ITU-T G.8265.1
DHCP, DHCPv6	Telecom ITU-T G.8275.1 / Telecom ITU-T G.8275.2SMPTE ST 2059-2
DSCP	ITU-T G.8265.1, ITU-T G.8275.1, ITU-T G.8275.2 Telecom-Profil
IEEE 802.1q VLAN Filtering/Tagging	AES67 Media
IEEE 802.1p QOS	IEEE 802.1AS
SNMPv1/v2/v3	Utility IEC 61850-9-3
Remote Syslog Support (UDP)	DOCSIS 3.1

11.7 Conformity

Conformity	
CB Scheme	
CE	
FCC	
UL	
CSA	
WEEE	Waste of Electrical and Electronic Equipment
RoHS	Restriction of Hazardous Substances
REACH	Registration, Evaluation, Authorization, and Restriction of Chemicals

12 Technical Appendix: GPS Antenna + Accessories

12.1 Technical Specifications: GPSANTv2 Antenna

Physical Dimensions

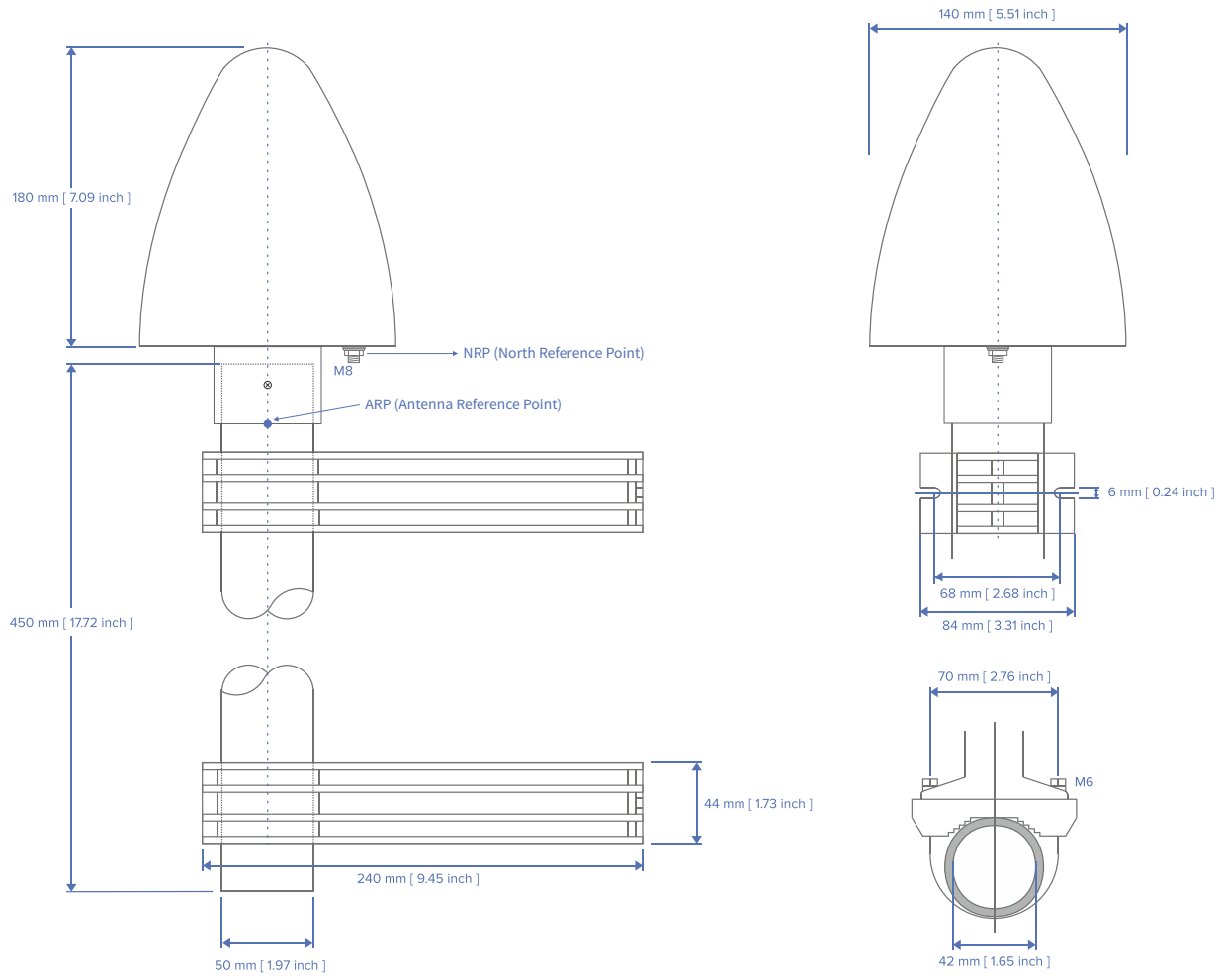

Electrical Specifications

Power Supply: (via Antenna Cable)	15 V ± 3 V
Nominal Current Draw: (via Antenna Cable)	Approx. 100 mA at 15 V, max. 115 mA

Signal Reception & Processing

Reception Frequency:	1575.42 MHz (GPS L1/Galileo E1 Band)
Axial Ratio:	≤ 3 dB at zenith
Element Gain:	Typically 5.0 dBic at zenith
Mixing Frequency:	10 MHz
Intermediate Frequency:	35.4 MHz
Out-of-Band Rejection:	≥ 70 dB @ 1555 MHz ≥ 55 dB @ 1595 MHz
Conversion Gain: Antenna Input to IF Output	59 dB ± 3 dB
Noise Figure:	Typically 1.8 dB, maximum 3 dB at +25 °C
Input Filter Survival Capacity:	Exposure to > 13 dBm for 24 h without destruction
Conversion Delay: (Patch Connector to IF Output)	Typically 152 ns ± 5 ns
Group Delay Ripple within 2.4 MHz System Bandwidth:	Max. 15 ns
Polarization:	Right-Hand Circular Polarization
ETSI-Compliant Frequency Blocking:	Blocked frequency range further extended to 6 GHz
P1dB Input:	–40 dBm
Antenna Pattern:	Vertical 3 dB Angle Width: 100° centered around azimuth

Connection

Connector Type:	Type-N, Female
Nominal Impedance:	50 Ω
Voltage Standing Wave Ratio (VSWR):	≤ 1.5 : 1
Grounding:	M8 threaded bolt and hexagon nut for use with corresponding ring lug

Specifications for Interference Immunity

Surge Protection:	Level 4 (per IEC 61000-4-5) Test Voltage: 4000 V Max. Peak Current @ 2 Ω: 2000 A
ESD Protection:	Level 4 (per IEC 61000-4-2) Contact Discharge: 8 kV Air Discharge: 15 kV

Mechanical and Environmental Specifications

Housing Material:	ABS Plastic Case for Outdoor Installation
Specified Environment:	Outdoor Environments
IP Rating:	IP65
Temperature Range (Operation):	–60 °C to +80 °C (–76°C to +176 °F)
Temperature Range (Storage):	–20 °C to +70 °C (–4°C to +158 °F)
Relative Humidity (Operation):	5 % to 95 % (non-condensing)
Weight:	1.4 kg (3.09 lbs), including mounting kit

12.2 Technical Specifications: MBG S-PRO Surge Protector

The MBG S-PRO is a surge protector manufactured by Phoenix Contact (Type Designation CN-UB-280DC-BB) and designed to protect coaxial connections. It is patched directly into the antenna line and consists of a replaceable gas discharge tube that redirects the energy from the cable shielding to the ground potential when ignited. Connect the MBG S-PRO using a ground conductor cable that is as short as possible.

The MBG S-PRO has no dedicated input/output polarity and no preferred installation orientation.

Figure 12.1: MBG S-PRO Surge Protector (Phoenix CN-UB-280DC-BB)

Features

- Excellent RF Performance
- Multiple Strike Capability
- 20 kA Surge Protection
- Bidirectional Protection

Contents of Package:	Surge Protector with Mounting Bracket and Accessories
Product Type:	Surge Protector for Transmission and Receiver Devices
Construction Type:	In-Line Breaker
Connector Types:	Type-N, Female/Type-N, Female

The original product page of the supplier (see link) of the CN-UB-280DC-BB surge protector provides detailed specifications, as well as a variety of product-specific documents under the link below:

Data Sheet (Download):

https://www.meinbergglobal.com/download/docs/shortinfo/english/cn-ub-280dc-bb_pc.pdf

13 RoHS Conformity

Conformity with EU Directive 2011/65/EU (RoHS)

We hereby declare that this product is compliant with the European Union Directive 2011/65/EU and its delegated directive 2015/863/EU "Restrictions of Hazardous Substances in Electrical and Electronic Equipment" and that no impermissible substances are present in our products pursuant to these Directives.

We warrant that our electrical and electronic products sold in the EU do not contain lead, cadmium, mercury, hexavalent chromium, polybrominated biphenyls (PBBs), polybrominated diphenyl ethers (PBDEs), bis(2-ethylhexyl)phthalat (DEHP), benzyl butyl phthalate (BBP), dibutyl phthalate (DBP), or diisobutyl phthalate (DIBP) above the legal limits.

14 Declaration of Conformity for Operation in the European Union

EU-Konformitätserklärung
Doc ID: microSync HR311/DC-June 16, 2025

Hersteller *Manufacturer*	Meinberg Funkuhren GmbH & Co. KG Lange Wand 9, D-31812 Bad Pyrmont

erklärt in alleiniger Verantwortung, dass das Produkt,
declares under its sole responsibility, that the product

Produktbezeichnung *Product Designation*	**microSync HR311/DC**

auf das sich diese Erklärung bezieht, mit den folgenden Normen und Richtlinien übereinstimmt:
to which this declaration relates is in conformity with the following standards and provisions of the directives:

RED – Richtlinie *RED Directive* 2014/53/EU	ETSI EN 303 413 V1.2.1 (2021-04)
EMV – Richtlinie *EMC Directive* 2014/30/EU	ETSI EN 301 489-1 V2.2.3 (2019-11) ETSI EN 301 489-19 V2.2.1 (2022-09) DIN EN IEC 61000-6-2:2019 DIN EN IEC 61000-6-3:2021 DIN EN 55032:2015/AC:2016/A11:2020/A1:2020 DIN EN 55035:2017/A11:2020
Niederspannungsrichtlinie *Low Voltage Directive* 2014/35/EU	DIN EN IEC 62368-1:2020/A11:2020
RoHS – Richtlinie *RoHS Directive* 2011/65/EU + 2015/863/EU	DIN EN IEC 63000:2018

Bad Pyrmont, den June 16, 2025

Aron Meinberg
Quality Management

MEINBERG
Meinberg Funkuhren GmbH & Co. KG
Lange Wand 9
31812 Bad Pyrmont

15 Declaration of Conformity for Operation in the United Kingdom

UK Declaration of Conformity

Doc ID: microSync HR311/DC-June 16, 2025

Manufacturer	Meinberg Funkuhren GmbH & Co. KG Lange Wand 9 31812 Bad Pyrmont Germany

declares that the product

Product Designation	**microSync HR311/DC**

to which this declaration relates, is in conformity with the following standards and provisions of the following regulations under British law:

Radio Equipment Regulations 2017 (as amended) *SI 2017/1206*	ETSI EN 303 413 V1.2.1 (2021-04)
Electromagnetic Compatibility Regulations 2016 (as amended) *SI 2016/1091*	ETSI EN 301 489-1 V2.2.3 (2019-11) ETSI EN 301 489-19 V2.2.1 (2022-09) EN IEC 61000-6-2:2019 EN IEC 61000-6-3:2021 EN 55032:2015/AC:2016/A11:2020/A1:2020 EN 55035:2017/A11:2020
Electrical Equipment (Safety) Regulations 2016 (as amended) *SI 2016/1101*	EN IEC 62368-1:2020/A11:2020
The Restriction of the Use of Certain Hazardous Substances in Electrical and Electronic Equipment Regulations 2012 (as amended) *SI 2012/3032*	EN IEC 63000:2018

Bad Pyrmont, Germany, dated June 16, 2025

Aron Meinberg
Quality Management

MEINBERG
Meinberg Funkuhren GmbH & Co. KG
Lange Wand 9
31812 Bad Pyrmont